Southern Illinois University Carbondale
OpenSIUC

Articles and Preprints | Department of Mathematics

1-2003

# Vertex-magic Labeling of Trees and Forests

I. D. Gray
*University of Newcastle*

J. MacDougall
*University of Newcastle*

John P. McSorley
*Southern Illinois University Carbondale*, mcsorley60@hotmail.com

Walter D. Wallis
*Southern Illinois University Carbondale*

Follow this and additional works at: http://opensiuc.lib.siu.edu/math_articles

Part of the Discrete Mathematics and Combinatorics Commons

Published in *Discrete Mathematics*, 26(1-3), 285-298.

Recommended Citation
Gray, I. D.; MacDougall, J.; McSorley, John P.; and Wallis, Walter D., "Vertex-magic Labeling of Trees and Forests" (2003). *Articles and Preprints*. Paper 85.
http://opensiuc.lib.siu.edu/math_articles/85

This Article is brought to you for free and open access by the Department of Mathematics at OpenSIUC. It has been accepted for inclusion in Articles and Preprints by an authorized administrator of OpenSIUC. For more information, please contact opensiuc@lib.siu.edu.

# Vertex-magic labeling of trees and forests

I. D. Gray, J. MacDougall

*School of Mathematics and Physics, University of Newcastle, Newcastle, NSW 2308, Australia*

J. P. McSorley

*Department of Computing, Information Science and Mathematics, London Guildhall University, 100 Minories, London EC3N 1JY, England*

W. D. Wallis

*Department of Mathematics, Southern Illinois University, Carbondale, IL 62901, USA*

**Abstract**

A *vertex-magic total labeling* of a graph $G(V, E)$ is a one-to-one map $\lambda$ from $E \cup V$ onto the integers $\{1, 2, \ldots, |E| + |V|\}$ such that

$$\lambda(x) + \sum \lambda(xy)$$

where the sum is over all vertices $y$ adjacent to $x$, is a constant, independent of the choice of vertex $x$. In this paper we examine the existence of vertex-magic total labelings of trees and forests. The situation is quite different from the conjectured behavior of *edge*-magic total labelings of these graphs. We pay special attention to the case of so-called *galaxies*, forests in which every component tree is a star.

All graphs in this paper will be finite. The graph $G = G(V, E)$ has vertex-set $V = V(G)$ and edge-set $E = E(G)$; we write $v$ for $|V(G)|$ and $e$ for $|E(G)|$.

A *total labeling* is a one-to-one map $\lambda$ from $E \cup V$ onto the integers $\{1, 2, \ldots, e+v\}$. The *weight* of vertex $x$ is the value $\lambda(x) + \sum \lambda(xy)$ (where the sum is over all vertices $y$ adjacent to $x$), and the weight of edge $xy$ is $\lambda(x) + \lambda(xy) + \lambda(y)$. A total labeling is *edge-magic* if there is a constant $k$ such that every edge $xy$ has weight $k$, and *vertex-magic* if there is a constant $h$ such that every vertex $x$ has weight $h$. A graph with an edge-magic total labeling $\lambda$ is called *edge-magic*, and $k$ is called the *magic sum* associated with $\lambda$; similarly a graph with a vertex-magic total labeling is *vertex-magic*, and $h$ is the *magic constant*.

Kotzig and Rosa [2] introduced edge-magic total labelings, under the name " magic valuations". In particular they showed that all caterpillars are edge-magic, and conjectured that all trees are edge-magic. This conjecture is interesting because of its similarity to the long-standing conjecture that all trees have graceful labelings, but so far there has been no progress on it.

Vertex-magic total labelings were defined in [3], after MacDougall observed that this natural analog of the edge-magic case arose in the solution to a high-school enrichment problem [4]. We shall see that not all trees are vertex-magic, and also explore results about forests.

## 1 Trees

In discussing trees, it is common to define a *leaf* to be a vertex of degree 1. Other vertices are called *internal*. The vertex-magic property depends on the proportion of leaves.

**Theorem 1** *Let $T$ be a tree with $n$ internal vertices and $\tau n$ leaves. Then $T$ does not admit a vertex-magic total labeling if*

$$\tau > \frac{1+\sqrt{12n^2+4n+1}}{2n}.$$

**Proof.** If $T$ has $n$ internal vertices and $\tau n$ leaves, then $v = (\tau+1)n$ and $e = (\tau+1)n-1$. So the labels to be used are $\{1, 2, \cdots, M\}$ where $M = 2(\tau+1)n-1$.

The maximum possible sum of weights on the leaves will be the sum of the $2\tau n$ largest labels:

$$\begin{aligned} & \sum_1^M i - \sum_1^{M-2\tau n} i \\ = & \frac{M(M+1)}{2} - \frac{(M-2\tau n)(M-2\tau n+1)}{2} \\ = & \tau n(2\tau n + 4n - 1). \end{aligned}$$

Since there are $\tau n$ leaves, we get

$$h \leq 2\tau n + 4n - 1.$$

On the other hand, the minimum possible sum of weights on the internal vertices occurs when the smallest weights $\{1, \cdots, n-1\}$ are assigned to the

internal edges (because they will be added twice) and the smallest remaining labels assigned to the internal vertices and the other edges. This sum of weights is

$$\begin{aligned}
&\sum_{1}^{M-\tau n} i + \sum_{1}^{n-1} i \\
&= \frac{(M-\tau n)(M-\tau n+1)}{2} + \frac{(n-1)n}{2} \\
&= \frac{n(n\tau^2 + (4n-1)\tau + (5n-3))}{2}
\end{aligned}$$

and since there are $n$ internal vertices,

$$h \geq n\tau^2 + (4n-1)\tau + (5n-3)$$

So no labeling will be possible when

$$\frac{n\tau^2 + (4n-1)\tau + (5n-3)}{2} > 2\tau n + 4n - 1,$$

i.e. when

$$n\tau^2 - \tau - (3n-1) > 0.$$

The result follows. □

A simple approximation of the above shows that a labeling is impossible for more than $\sqrt{3}n + 1$ leaves. For small $n$, here are the largest number of leaves permitted by the theorem:

| $n$ | 1 | 2 | 3 | 4 | 5 | 6 | 7 |
|---|---|---|---|---|---|---|---|
| $L_n$ | 2 | 4 | 5 | 7 | 9 | 11 | 12 |

For $n = 2$, 3, and 4, we can attain these bounds. Examples are shown in Figure 1.

Theorem 1 does not provide a sufficient condition for existence of a vertex-magic total labeling, however. The following result shows that there are also restrictions imposed by the degrees of the internal vertices.

**Theorem 2** *If $\Delta$ is the largest degree of any vertex in a tree $T$ with $v$ vertices, then $T$ does not admit a vertex-magic total labeling whenever*

$$\Delta > \frac{-7 + \sqrt{33 + 32v}}{2}.$$

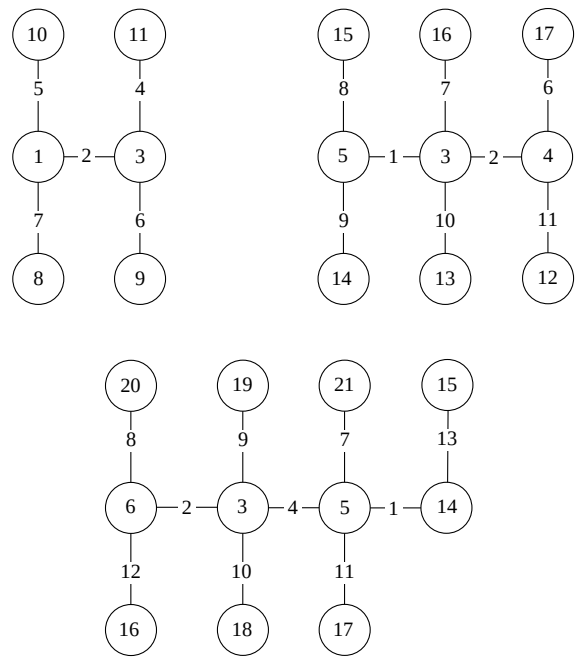


Fig. 1. Trees attaining the bound of Theorem 1

**Proof.** Let $c$ be the vertex of maximum degree $\Delta$. The minimum possible weight on $c$ is the sum of the $(\Delta+1)$ smallest labels.

$$\begin{aligned} h &\geq \sum_{1}^{\Delta+1} i \\ &= \tfrac{1}{2}(\Delta+1)(\Delta+2). \end{aligned}$$

On the other hand, since there is an internal vertex of degree $\Delta$, there are at least $\Delta$ leaves in $T$. So the maximum possible sum of weights on the leaves is at most the sum of the $2\Delta$ largest labels. Therefore

$$\begin{aligned} h &\leq \frac{1}{\Delta}\left(\sum_{1}^{2v-1} i - \sum_{1}^{2v-2\Delta-1} i\right) \\ &= 4v - 2\Delta - 1. \end{aligned}$$

So a labeling will be impossible whenever

$$4v - 2\Delta - 1 < \frac{(\Delta+1)(\Delta+2)}{2},$$

that is, when

$$\Delta^2 + 7\Delta + 4 - 8v > 0.$$

The result follows. $\square$

The following table shows the maximum degree permitted by the restriction in Theorem 2 for small values of $v$:

| $v$ | 3 | 4 | 5 | 6 | 7 | 8 | 9 | 10 |
|---|---|---|---|---|---|---|---|---|
| $\Delta$ | 2 | 2 | 3 | 4 | 4 | 5 | 5 | 5 |

These theorems still do not provide sufficient conditions since we can prove, for example, that the tree with 6 vertices shown in Figure 2 has no vertex-magic total labeling. The reasoning is as follows: considering the weight of vertex $v$ we see that the constant is at least $1 + \cdots + 5 = 15$ and from the leaves, the constant is at most $(11+10+\cdots+4)/4 = 15$. So $h = 15$, and this can only be acheived by the assignment of labels described. But this means that at least one of the edges incident with $v$ has label less than 4, which contradicts the assignment of labels to the leaf edges.

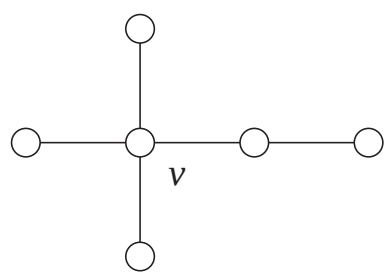


Fig. 2. A tree with no vertex-magic total labeling

In particular, Theorem 2 proves that the star $K_{1,n}$ (with $\Delta = n$ and $v = n+1$) is not vertex-magic when $n > 2$. It is obvious that $K_{1,1}$ is not vertex-magic — the conditions would require the two vertices to receive the same label. If the trivial case of $K_1$ is not treated as a star, we have:

**Corollary 2.1** *The only vertex-magic star is $K_{1,2}$.*

(This was observed in [3].)

## 2 Forests in general

Calculations similar to those in the proof of Theorem 1 can be carried out for a forest of $s$ components. If we have $n$ internal vertices and $\tau n$ leaves, then there are $n - s$ internal edges, and the label set is $\{1, 2, \cdots, M\}$ where now $M = 2(\tau+1)n - s$. The comparison of maximum sum of weights on the leaves to minimum sum of weights on internal vertices gives the following analog of Theorem 1:

**Theorem 3** *Let $F$ be a forest of $s$ components. If $F$ has $n$ internal vertices*

*and $\tau n$ leaves, then there is no vertex-magic total labeling whenever*

$$\tau > \frac{2s-1+\sqrt{12n^2+4n(2s-1)-(4s^2-4s-1)}}{2n}.$$

## 3 Galaxies

In view of our special knowledge about vertex-magic total labelings of stars, it is reasonable to ask which forests consisting only of stars — disjoint unions of stars — are vertex-magic. The term *galaxy* has been used for a disjoint union of stars (see, for example, [1]).

Suppose $G$ is the union $K_{1,n_1} \cup K_{1,n_2} \cup \ldots \cup K_{1,n_t}$ of $t$ stars. The number of edges of $G$ is $e = n_1+n_2+\ldots+n_t$. Suppose $G$ has a vertex-magic total labeling with magic constant $h$. The sum of the weights of the centers of the stars will be $th$; on the other hand, it will equal at least the sum of the smallest $e+t$ positive integers (the $e$ spokes and the $t$ centers). So

$$th \geq \sum_{i=1}^{e+t} i = \tfrac{1}{2}(e+t)(e+t+1). \tag{1}$$

On the other hand, the sum of the $e$ weights of the leaves equals the sum of the labels on all the edges and all the vertices except the centers, so

$$eh \leq \sum_{i=t+1}^{2e+t} i = \tfrac{1}{2}(2e+t)(2e+t+1) - \tfrac{1}{2}t(t+1). \tag{2}$$

Combining (1) and (2),

$$\begin{aligned} e(e+t)(e+t+1) &\leq t(2e+t)(2e+t+1) - t^2(t+1), \\ (e+t)(e+t+1) &\leq e^2(4t) + e(4t^2+2t), \end{aligned}$$

so $e^2 + e(1-2t) - (3t^2+t) \leq 0$. It follows that

$$e \leq \frac{2t-1+\sqrt{16t^2+1}}{2} < 3t. \tag{3}$$

**Theorem 4** *If a galaxy is vertex-magic, then the average size of the component stars is less than* 3.

It is clear that Theorem 4 is the best-possible conclusion from (3), because $\frac{2t-1+\sqrt{16t^2+1}}{2} > 3t-1$. But not every union of stars with average size smaller than 3 is vertex-magic.

## 4 Restrictions on star sizes

From here on we shall assume that $G$ is a vertex-magic galaxy of $t$ stars that has $3t-1$ edges, and $G$ has a vertex-magic total labeling $\lambda$ with magic constant $h$.

Equations (1) and (2) yield

$$8t-2 \leq h \leq 8t-1.$$

Say $a$ and $b$ are the labels on some edge and its adjacent leaf. Then $a$ and $b$ are positive and $a+b=h$. No label can be greater than $7t-2$, so neither $a$ nor $b$ can be smaller than $h-7t+2$. So $h \geq 8t-2$ implies that $1, 2, \ldots, t-1$ must all be labels of centers of stars, and if $h = 8t-1$ then $t$ is also a center label. Moreover, if $h = 8t-2$ then neither $a$ nor $b$ can equal $4t-1$, because repetitions are not allowed. So:

**Lemma 5** *If $G$ has a vertex-magic total labeling $\lambda$ with constant $8t-2$, the centers have labels*

$$1, 2, \ldots, t-1, 4t-1.$$

*If $G$ has a vertex-magic total labeling $\lambda$ with constant $8t-1$, the centers have labels*

$$1, 2, \ldots, t-1, t.$$

Let $S_C$ and $S_E$ denote the sums of labels on the centers and edges respectively. Then, summing the weights of the centers, $S_C + S_E = ht$. If $h = 8t-2$, Lemma 5 gives $S_C = \frac{1}{2}t(t-1) + 4t - 1$, so

$$S_E = t(8t-2) - [\tfrac{1}{2}t(t-1) + 4t - 1] = \tfrac{1}{2}(15t^2 - 11t + 2).$$

But no edge label is smaller than $t$, so $S_E \geq t + (t+1) + \ldots + (4t-2) = \frac{1}{2}(15t^2 - 11t + 2)$, and equality must hold. So the edge labels are precisely $t, (t+1), \ldots, (4t-2)$. If $h = 8t-1$, the Lemma gives $S_C = \frac{1}{2}t(t+1)$, so

$$S_E = t(8t-1) - \tfrac{1}{2}t(t+1) = \tfrac{1}{2}(15t^2 - 3t).$$

In this case no edge label is smaller than $t+1$, so $S_E \geq (t+1) + (t+2) + \ldots + (4t-1) = \frac{1}{2}(15t^2 - 5t)$. This is not tight, but the sum of edge labels is only greater than the minimum by $t$.

This information can be used to limit the number of small stars — $K_{1,2}$'s — in any vertex-magic union.

**Theorem 6** *Suppose $G$ is a vertex-magic galaxy of $t$ stars which between them have $3t-1$ edges; let $r$ be the number of stars $K_{1,2}$ in $G$. Then $r \leq \frac{2}{5}(t+1)$.*

**Proof.** First suppose $h = 8t-2$. Possibly one $K_{1,2}$ has center label $4t-1$. The sum of the weights of the centers of the other $K_{1,2}$'s is $(r-1)(8t-2)$. This must equal at most the sum of the $r-1$ greatest center labels and the $2(r-1)$ greatest edge labels. So

$$\begin{aligned}(r-1)(8t-2) \leq & [(t-r+1)+(t-r+2)+\ldots+(t-1)] \\ & +[(4t-2r+1)+(4t-2r+2)+\ldots+(4t-2)], \\ 8t-2 \leq & 9t-\tfrac{1}{2}(5r+2).\end{aligned}$$

so

$$t \geq \tfrac{1}{2}(5r-2),$$

and $r \leq \frac{2}{5}(t+1)$.

If $h = 8t-1$, the sum of the weights of the centers of the $K_{1,2}$'s is $r(8t-1)$. The sum of the $2r$ greatest edge labels could exceed $(4t-2r-1)+(4t-2r)+\ldots+(4t-2)$ by $t$, so

$$\begin{aligned}r(8t-1) \leq & [(t-r+1)+\ldots+(t-1)+t] \\ & +[(4t-2r-1)+(4t-2r)+\ldots+(4t-2)]+t,\end{aligned}$$

from which $5r^2-(2t-3)r-2t \leq 0$, so

$$r \leq \frac{1}{10}(2t-3+\sqrt{4t^2+28t+9}) < \frac{1}{10}(2t-3+\sqrt{4t^2+28t+49}) = \frac{2}{5}(t+1)$$

as required. □

There is also a restriction on the largest star. Suppose one of the stars in $G$ has $s$ edges. If $h = 8t-2$, then the center $c$ of this large star has weight at least $1+t+(t+1)+\ldots+(t+s-1) = 1+st+\frac{1}{2}s(s-1)$, so

$$8t-2 \geq 1+st+\tfrac{1}{2}s(s-1). \tag{4}$$

Clearly $s < 8$, no matter what value $t$ takes. Even for smaller $s$, not all $t$ are possible. The inequality (4) can be written as

$$t \geq \frac{s^2-s+6}{16-2s}.$$

In the case $h = 8t - 1$, the center of the largest star has weight at least $1 + (t+1) + \ldots + (t+s) = 1 + st + \frac{1}{2}s(s+1)$. Again $s < 8$. For smaller $s$ we obtain the slightly stronger condition

$$t \geq \frac{s^2 + s + 4}{16 - 2s}.$$

From this we can deduce the following bounds:

**Theorem 7** *Suppose $G$ is a vertex-magic galaxy of $t$ stars which between them have $3t - 1$ edges; then no star can contain 8 edges. If the largest star has $s$ edges, then:*

$$\begin{aligned}
\textit{if } h = 8t - 1 \textit{ then } s = 7 &\Rightarrow t \geq 30,\\
s = 6 &\Rightarrow t \geq 12,\\
s = 5 &\Rightarrow t \geq 6,\\
s = 4 &\Rightarrow t \geq 3,\\
s = 3 &\Rightarrow t \geq 2,\\
\textit{while if } h = 8t - 2 \textit{ then } s = 7 &\Rightarrow t \geq 24,\\
s = 6 &\Rightarrow t \geq 9,\\
s = 5 &\Rightarrow t \geq 4,\\
s = 4 &\Rightarrow t \geq 3,\\
s = 3 &\Rightarrow t \geq 2.
\end{aligned}$$

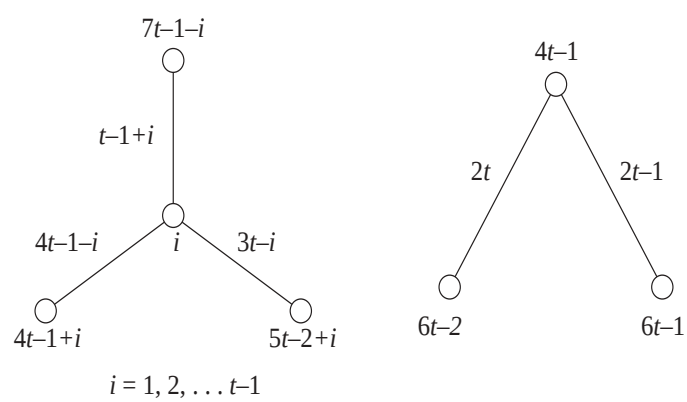


Fig. 3. Vertex-magic total labeling of $(t-1)K_{1,3} \cup K_{1,2}$

The extreme cases are worth considering. If $t$ is any positive integer, then $(t-1)K_{1,3} \cup K_{1,2}$ is always a possibility according to Theorem 7, and it is in fact vertex-magic. A labeling with $h = 8t - 2$ has stars labeled as follows:

| *center* | *edges* | |
|---|---|---|
| $4t-1$ | $(2t, 6t-2)$<br>$(2t-1, 6t-1)$ | |
| $i$ | $(t-1+i, 7t-1-i)$<br>$(3t-i, 5t-2+i)$<br>$(4t-1-i, 4t-1+i)$ | $i = 1, 2, \ldots, t-1$ |

$((s, b) \ldots$ denotes an edge labeled $b$ joining the center to a leaf labeled $b)$ and is illustrated in Figure 3.

There is no vertex-magic total labeling with $h = 8t - 1$ in the case $t = 2$ For $t = 3$, one labeling is

| *center* | *edges* |
|---|---|
| 1 | $(13, 10), (9, 14)$ |
| 2 | $(11, 12), (6, 17), (4, 19)$ |
| 3 | $(8, 15), (7, 16), (5, 18)$ |

If t is even, say $t = 2u \geq 4$, an example is

| *center* | *edges* | |
|---|---|---|
| 1 | $(7u-1, 9u)$<br>$(9u-1, 7u)$ | |
| 2 | $(3u-1, 13u)$<br>$(5u-2, 11u+1)$<br>$(8u, 8u-1)$ | |
| $i$ | $(4u+2-i, 12u-3+i)$<br>$(6u+1-i, 10u-2+i)$<br>$(6u-4+i, 10u+3-i)$ | $3 \leq i \leq u+2$ |
| $i$ | $(4u+1-i, 12u-2+i)$<br>$(3u-3+i, 13u+2-i)$<br>$(9u+1-i, 7u-2+i)$ | $u+3 \leq i \leq 2u,$ |

and if $t = 2u + 1 \geq 5$, we can use

| *center* | *edges* | |
|---|---|---|
| 1 | $(7u+2, 9u+5)$<br>$(9u+4, 7u+3)$ | |
| $i$ | $(4u+2-i, 12u+5+i)$<br>$(5u+2+i, 11u+5-i)$<br>$(7u+3-i, 9u+4+i)$ | $2 \leq i \leq u$ |
| $i$ | $(u+1+i, 15u+6-i)$<br>$(6u+2-i, 10u+5+i)$<br>$(9u+4-i, 7u+3+i)$ | $u+1 \leq i \leq 2u$ |
| $2u+1$ | $(4u+1, 12u+6)$<br>$(5u+2, 11u+5)$<br>$(5u+3, 11u+4)$ | |

However, $(t-1)K_{1,2} \cup K_{1,t+1}$ can never have a vertex-magic total labeling when $t > 3$. The cases $t = 2, 3$ are vertex-magic—when $t = 2$, the construction of Figure 3 provides an example. A labeling of $2K_{1,2} \cup K_{1,4}$ is provided in Section 5.

## 5 Small galaxies

In Figure 4 we present examples of vertex-magic total labelings for galaxies up to $t = 7$ stars with $3t - 1$ edges. The line "$x - yz \ldots$" denotes a star with center label $x$ and leaf labels $y, z, \ldots$ (the edge labels are omitted, for brevity).

Note that two of the small examples cannot be realized; however, we have constructed a number of larger examples without difficulty, and it may be that the two examples already found are the only cases where the known necessary conditions are not sufficient.

| $t$ | type | $h = 8t - 2$ | $h = 8t - 1$ |
|---|---|---|---|
| 2 | 23 | A | Y |
| 3 | 224 | Y | $3 - 12, 14$ |
| | | | $2 - 10, 15$ |
| | | | $1 - 16, 17, 18, 19$ |
| | 233 | A | A |
| 4 | 2234 | $3 - 16, 17$ | $1 - 14, 18$ |
| | | $15 - 19, 26$ | $3 - 15, 19$ |
| | | $2 - 18, 21, 23$ | $4 - 20, 21, 25$ |
| | | $1 - 20, 22, 24, 25$ | $2 - 22, 23, 24, 26$ |
| | 2333 | A | A |
| 5 | 22334 | $4 - 20, 22$ | $1 - 17, 23$ |
| | | $19 - 28, 29$ | $2 - 20, 21$ |
| | | $2 - 25, 26, 27$ | $3 - 24, 25, 32$ |
| | | $3 - 23, 24, 32$ | $4 - 26, 27, 29$ |
| | | $1 - 23, 30, 31, 33$ | $5 - 28, 30, 31, 33$ |
| | 23333 | A | A |
| 6 | 222335 | X | $3 - 21, 29$ |
| | | | $4 - 19, 24$ |
| | | | $5 - 25, 27$ |
| | | | $2 - 31, 32, 33$ |
| | | | $6 - 30, 34, 36$ |
| | | | $1 - 35, 37, 38, 39, 40$ |
| | 222344 | X | $4 - 21, 30$ |
| | | | $5 - 23, 29$ |
| | | | $6 - 25, 28$ |
| | | | $3 - 31, 32, 34$ |
| | | | $1 - 27, 36, 39, 40$ |
| | | | $2 - 33, 35, 37, 38$ |

| $t$ | type | $h = 8t - 2$ | $h = 8t - 1$ |
|---|---|---|---|
| 6 | 223334 | $23 - 24, 27$ | $5 - 21, 31$ |
| | | $5 - 31, 38$ | $6 - 23, 30$ |
| | | $4 - 28, 33, 35$ | $2 - 27, 32, 37$ |
| | | $3 - 29, 30, 36$ | $3 - 28, 33, 36$ |
| | | $2 - 25, 32, 37$ | $4 - 29, 34, 35$ |
| | | $1 - 26, 34, 39, 40$ | $1 - 25, 38, 39, 40$ |
| | 233333 | A | A |
| 7 | 2223335 | $5 - 29, 30$ | $5 - 24, 36$ |
| | | $6 - 28, 32$ | $6 - 29, 32$ |
| | | $27 - 34, 47$ | $7 - 28, 34$ |
| | | $2 - 35, 36, 39$ | $2 - 30, 40, 42$ |
| | | $3 - 33, 38, 40$ | $3 - 33, 37, 43$ |
| | | $4 - 31, 37, 44$ | $4 - 35, 38, 41$ |
| | | $1 - 41, 42, 43,$ | $1 - 39, 44, 45,$ |
| | | $45, 46$ | $46, 47$ |
| | 2223344 | $5 - 29, 30$ | $3 - 24, 34$ |
| | | $6 - 28, 32$ | $4 - 29, 30$ |
| | | $27 - 38, 43$ | $5 - 28, 32$ |
| | | $3 - 34, 37, 40$ | $6 - 35, 39, 42$ |
| | | $4 - 35, 38, 41$ | $7 - 33, 41, 43$ |
| | | $1 - 31, 39, 46, 47$ | $1 - 36, 37, 46, 47$ |
| | | $2 - 33, 42, 44, 45$ | $2 - 38, 40, 44, 45$ |
| | 2233334 | $6 - 28, 32$ | $2 - 28, 29$ |
| | | $27 - 34, 47$ | $3 - 24, 34$ |
| | | $2 - 29, 40, 41$ | $4 - 32, 38, 44$ |
| | | $3 - 30, 39, 42$ | $5 - 30, 40, 45$ |
| | | $4 - 31, 38, 43$ | $6 - 35, 39, 42$ |
| | | $5 - 33, 36, 45$ | $7 - 33, 41, 43$ |
| | | $1 - 35, 37, 45, 46$ | $1 - 36, 37, 46, 47$ |
| | 2333333 | A | A |

A — Given by constructions in Section 4

X — Excluded by theorems in Section 4

Y — Excluded by exhaustive search

Fig. 4. Labelings for small galaxies

## 6 Unions of 2-paths

Another interesting case is the union of $s$ 3-vertex paths. The path is of course a star $K_{1,2}$. No vertex-magic graph can have a component $K_{1,1}$, so $sK_{1,2}$ is the smallest galaxy containing $s$ non-trivial stars. We construct a vertex-magic total labeling for every case.

The construction when $s \equiv 0$ or $1 (\bmod 4)$ uses a special type of *starter*. Recall (see, for example, [5]) that a starter in an abelian group $G$ of odd order is a partition of the set $G^*$ of non-zero elements of $G$ into pairs $\{x_1, y_1\}, \{x_2, y_2\}, \ldots$, such that the differences $\pm(y_1 - x_1), \pm(y_2 - x_2), \ldots$ together constitute $G^*$. We use a starter in $\mathbb{Z}_{2s+1}$ with the special property that the differences $\{(y_1 - x_1), (y_2 - x_2), \ldots\}$ equal $\{1, 2, \ldots, s\}$ in ordinary integer arithmetic.

**Lemma 8** *If $s \equiv 0$ or $1 (\bmod 4)$ then the integers $1, 2, \ldots, 2s$ can be partitioned into $s$ pairs $(x_i, y_i)$ such that $\{y_i - x_i : i = 1, 2, \ldots, s\} = \{1, 2, \ldots, s\}$.*

**Proof.** First assume $s \equiv 0 (\bmod 4)$, say $s = 4t$. The integers are paired as follows:

$$
\begin{aligned}
&\text{for } t = 1 : (1,2), (5,7), (3,6), (4,8) \\
&\text{for } t = 2 : (2,3), (11,13), (4,7), (10,14), (1,6), (9,15), (5,12), (8,16) \\
&\text{for } t \geq 3 : (t, t+1), (2t, 4t-1), (2t+1, 6t), \\
&\qquad (x, 4t-1-x) \ 1 \leq x \leq t-1, \\
&\qquad (x, 4t+1-x) \ t+2 \leq x \leq 2t-1, \\
&\qquad (x, 12t-x) \quad 4t \leq x \leq 6t-1.
\end{aligned}
$$

When $s \equiv 1 (\bmod 4)$, say $s = 4t + 1$, the integers are paired as follows:

$$
\begin{aligned}
&\text{for } t = 0 : (1,2) \\
&\text{for } t = 1 : (1,2), (7,9), (3,6), (4,8), (5,10) \\
&\text{for } t \geq 2 : (t, t+1), (2t+1, 4t+2), (2t+2, 6t+2), (4t+1, 8t+2), \\
&\qquad (x, 4t+1-x) \quad 1 \leq x \leq t-1, \\
&\qquad (x, 4t+3-x) \quad t+2 \leq x \leq 2t, \\
&\qquad (x, 12t-1-x) \ 4t+3 \leq x \leq 6t+1.
\end{aligned}
$$

In each case, it is readily verified that each of $1, \cdots, 2s$ is used precisely once, and that each of $1, \cdots, s$ occurs precisely once as a difference. $\square$

**Theorem 9** *If $s \equiv 0$ or $1 (\bmod 4)$ then $sK_{1,2}$ has a vertex-magic total labeling with magic constant $6s+1$.*

**Proof.** We construct a labeling in which the vertices of order 2 receive labels $1, 2, \ldots, s$. The edges adjacent to the center labeled $i$ receive labels $e_i$ and $f_i$, and the corresponding leaves are labeled $u_i$ and $v_i$ respectively. If the labeling is to be vertex-magic with magic constant $h$,

$$i + e_i + f_i = e_i + u_i = f_i + v_i = h. \tag{5}$$

So, for each $i$,

$$i = h - (e_i + f_i) = (h - e_i) - f_i = u_i - f_i.$$

We select a partition of $\{1, 2, \ldots, 2s\}$ into $s$ pairs $(x_i, y_i)$ such that $\{y_i - x_i : i = 1, 2, \ldots, s\} = \{1, 2, \ldots, s\}$, as guaranteed by Lemma 8, and reorder the pairs so that $y_i - x_i = i$ for each $i$. We then define

$$e_i = 3s + 1 - y_i,\ f_i = x_i + 3s,\ u_i = y_i + 3s,\ v_i = 3s + 1 - x_i.$$

It is clear that this assignment satisfies (5). $\square$

The construction when $s \equiv 2$ or $3 (\bmod 4)$ is a slight generalization of the earlier one.

**Lemma 10** *If $s \equiv 2$ or $3 (\bmod 4)$ then the integers $1, 2, \ldots, 2s-2$ can be partitioned into $s-1$ pairs $(x_i, y_i)$ such that $\{y_i - x_i : i = 1, 2, \ldots, s\} = \{1, 3, 4, \ldots, s\}$.*

**Proof.** First assume $s \equiv 2 (\bmod 4)$, say $s = 4t + 2$. The integers are paired as follows:

for $t = 0 : (1, 2)$

for $t = 1 : (2, 3), (6, 9), (4, 8), (5, 10), (1, 7)$

for $t \geq 2 : (t+1, t+2), (2t+2, 4t+4), (2t+3, 6t+4), (2t+4, 6t+3),$

$(x, 4t+4-x) \quad 1 \leq x \leq t,$

$(x, 4t+6-x) \quad t+3 \leq x \leq 2t+1,$

$(x, 12t+7-x)\ 4t+5 \leq x \leq 6t+2.$

When $s \equiv 3 (\bmod 4)$, say $s = 4t + 3$, the integers are paired as follows:

$$\begin{aligned}
&\text{for } t=0: (2,3),(1,4)\\
&\text{for } t=1: (3,4),(9,12),(6,10),(2,7),(5,11),(1,8)\\
&\text{for } t\geq 2: (t+2,t+3),(2t+3,6t+5),(2t+4,6t+4),(6t+3,8t+4),\\
&\qquad (x,4t+5-x) \quad 1\leq x\leq t+1,\\
&\qquad (x,4t+7-x) \quad t+4\leq x\leq 2t+2,\\
&\qquad (x,12t+8-x)\ 4t+5\leq x\leq 6t+2.
\end{aligned}$$

Again it is readily verified that each of $1,\cdots,2s-2$ is used precisely once, and that each of $1,3,4,\cdots,s$ occurs precisely once as a difference. $\square$

**Theorem 11** *If $s\equiv 0$ or $1(\bmod 4)$ then $sK_{1,2}$ has a vertex-magic total labeling with magic constant $6s+1$.*

The proof is very similar to that of Theorem 9. We take $e_2, f_2, u_2, v_2$ to be $3s-1, 3s, 3s+2, 3s+1$; $s-1$ pairs $\{x_i, y_i\}(i\neq 2)$ are chosen from $\{1,2,\ldots,2s-2\}$ so that $y_i-x_i=i$, and

$$e_i=3s-1-y_i,\ f_i=x_i+3s+2,\ u_i=y_i+3s+2,\ v_i=3s-1-x_i$$

yield a vertex-magic total labeling with $h=6s+1$. $\square$

## References


[1] F. Harary and D. F. Hsu, Node-graceful graphs. *Canad. Math. Bull.* **13** (1970), 451–461.

[2] A. Kotzig and A. Rosa, Magic valuations of finite graphs. *Canad. Math. Bull.* **13** (1970), 451–461.

[3] J. MacDougall, M. Miller, Slamin and W. D. Wallis, Vertex-magic total labelings. *Utilitas Math.* (*to appear*).

[4] University of Sydney, Mathematics Enrichment Groups, Exercises for March 26, 1999.

[5] W. D. Wallis, *One-Factorizations* (Kluwer, 1997).