The Psychological Record, 2008, 58, 569–584

TEMPORAL RELATIONS AND INTELLIGENCE: CORRELATING RELATIONAL PERFORMANCE WITH PERFORMANCE ON THE WAIS-III

Denis O'Hora
University of Ulster

Martha Peláez
Florida International University

Dermot Barnes-Holmes
National University of Ireland, Maynooth

Gordon Rae
University of Ulster

Karen Robinson and Tahir Chaudhary
Florida International University

Relational frame theory (RFT) explicitly suggests that derived relational responding underlies complex verbally-based cognitive performances. The current study investigated whether the ability to respond in accordance with temporal relations between stimuli was predictive of performance on the four indices of the Wechsler Adult Intelligence Scale, third edition (WAIS-III). In line with RFT predictions, for 81 undergraduate students between 18 and 48 years old, successfully completing a temporal relational task predicted better performance on the Verbal Comprehension and Perceptual Organization indices but not on the Working Memory or Processing Speed indices. In addition, correlations observed between the percentage of correct temporal relational responses and individual subscales demonstrated strong within-index homogeneity, which highlights the utility of the index factor structure in WAIS-III.

Much of the meaning we glean from our world stems from the relations we observe and describe between events. We might be "late" for work, have

Denis O'Hora is now at the National University of Ireland, Galway.

The authors thank Rick Dale, Gary Adamson, and two anonymous reviewers for their astute comments on earlier drafts of this manuscript.

Correspondence concerning this article should be addressed to Denis O'Hora, Department of Psychology, National University of Ireland, Galway, University Road, Galway, Ireland. E-mail: denis.ohora@nuigalway.ie

"less" money than we need to afford a holiday, be "more" of a man or woman than someone we do not respect. It is hardly surprising therefore that psychological research on relational responding has a long history. Stemming from philosophical disputes in the late nineteenth century, the earliest relational responding research focused primarily on ascertaining whether animals responded to absolute or relative properties of stimuli. Verlaine (1927; cited in Reese, 1968), for example, demonstrated that bees learned to choose the brighter option in a transposition paradigm.

Until the cognitive revolution of the 1960s, most relational responding research was conducted by behavior analysts. Since then, cognitive psychologists have been to the forefront in the experimental analysis of relational responding and, in particular, in detailing the development of relational responding in humans. Although these subdisciplines of psychology are often presented as mutually antagonistic or dismissive, recent commentators (Dale, 2005; Galizio, Stewart, & Pilgrim, 2001) point out that it is increasingly the case that behavior analysts and cognitive psychologists have overlapping interests and common methodological concerns. This is particularly true in the study of relational responding.

Stimulus equivalence is a complex relational performance that has been extensively studied in human participants by behavioral researchers (see Dickins & Dickins, 2001; Dymond & Rehfeldt, 2000; and Sidman, 1994, for reviews). In a typical stimulus equivalence experiment, participants are trained to choose a stimulus, B, in the presence of another stimulus, A (i.e., given A, choose B), and a further stimulus, C, in the presence of B (i.e., given B, choose C). If participants can subsequently match each stimulus to itself (*reflexivity*; given A, choose A), demonstrate the reverse of the trained relations (*symmetry*; given B, choose A) and combine both trained relations (*transitivity*; given A, choose C), then stimulus equivalence is said to have occurred. A number of behavioral theories have been proposed to explain stimulus equivalence, but one in particular, relational frame theory (RFT; Hayes, Barnes-Holmes, & Roche, 2001), has given rise to a wide range of research that has attempted to appraise the flexibility and complexity of relational responding observed in humans. Of particular relevance to the current study, two core premises of relational frame theory are that relational responding facilitates complex language behavior and that such responding can be learned and improved through training.

In the terminology of RFT, the novel relational responses observed in the stimulus equivalence preparation are called *derived* relational responses (Hayes & Hayes, 1992) and, in line with the theory, much research has shown that the ability to derive relations increases with language ability. In one longitudinal study, Lipkens, Hayes, and Hayes (1993) tested a single child for stimulus equivalence over 7 months, from 16 months to 23 months of age, and found that although symmetry was present at 16 months, equivalence was not observed until 23 months and with considerable training. Devany, Hayes, and Nelson (1986), attempted to demonstrate stimulus equivalence in three groups of children: one group (Group 1) consisted of normally developing children between 2 and 3 years of age; a second group (Group 2) consisted of developmentally delayed children, matched with Group 1 for mental age, who used speech or signs spontaneously and appropriately; and a final group (Group 3) consisted of developmentally delayed children, matched for mental age, who did not demonstrate these language behaviors. All of the language-able children (Groups 1 and 2) demonstrated stimulus equivalence, but

none of the language-disabled children did so (see also Barnes, McCullagh, & Keenan, 1990) suggesting that the ability to derive equivalence relations was predicted by linguistic ability rather than overall cognitive ability. Finally, Peláez, Gewirtz, Sanchez, and Mahabir (2000) demonstrated that the number of training trials required for children aged 21 to 25 months to demonstrate equivalence correlated with performance on the Bzoch-League Receptive-Expressive Emergent Language Scale (Bzoch & League, 1991).

Similarly, much cognitive psychological research suggests that a child's cognitive development can be observed in the increasing relational complexity of the language and concepts the child employs, as he or she grows older (Andrews & Halford, 1998, 2002; Gentner & Rattermann, 1991). Halford and colleagues have investigated relational complexity in terms of the "arity of relations," that is, the number of arguments related (Andrews & Halford, 2002, p. 154). Unary relations have only one argument (e.g., class membership; *John* is a man), binary relations have two (e.g., comparison; *John* is taller than *Mary*), and ternary relations have three (e.g., addition; $2 + 3 = 5$). As children grow, their ability to make more complex combinations of relations increases. Unary relations, for instance, seem to be understood at 1 year of age (Sugarman, 1982; Younger, 1993), and binary relations by 2 years of age (Halford, 1982). Andrews and Halford (1998) found that 20% of 4-year-olds successfully responded in accordance with ternary relations, compared with 57% of 6-year-olds (cf. Goswami, 1995). Andrews and Halford (2002) replicated this progression, finding that 15.5% of 3- and 4-year-olds, 48.3% of 5-year-olds, 70.2% of 6-year-olds, and 77.8% of 7- and 8-year-olds correctly responded to ternary relations.

To explain such developmental changes in relational responding, Halford (1992) suggested that age-related maturational changes increase cognitive processing capacity to enable children to process relations of increasing complexity. Specifically, he suggests that children typically acquire the capacity necessary for unary, binary, ternary, and quaternary relations at median ages of 1, 2, 5, and 11 years, respectively. He concedes, however, that these are "soft" constraints and that the ability to complete such tasks is not all or none but rather is graded (Halford et al., 1994). This is not the only explanation of such age-related variation however. An alternative perspective is provided by Rattermann and Gentner (1998), who propose that the relational shift from responding controlled by functional or physical equivalence of stimuli to more arbitrary relational responding is based on increased relational knowledge and, in particular, the "depth" of relational knowledge. A third perspective is provided by Goswami (1992), who posits that young children's focus on overall object similarity is a performance factor that interferes with accurate completion of relational tasks. According to this view, therefore, young children are capable of relational responding but are more likely to respond on the basis of object similarity in certain experimental contexts. As the child develops, he or she begins to acquire greater ability to choose when and where to respond relationally and to interpret more complex performance requirements as provided by adults.

Temporal relations are particularly important in making sense of the world, and subjective time has been extensively studied by researchers from behavioral and cognitive traditions (Allan, 1979, 1998; Bizo, Chu, Sanabria, & Killeen, 2006; Grondin, 2001; Wearden, 1991, 1999). In humans,

our dependency on spoken language requires a sensitivity to temporally extended sequences, and, indeed, the identification of temporal patterns in speech occurs as young as 6–9 months old (e.g., Marcus, Vijayan, Bandi Rao, & Vishton, 1999). Recent behavioral research suggests that temporal relational responding (i.e., identifying and abstracting temporal relations between stimuli and responding in accordance with such relations) is related to linguistic ability. O'Hora, Peláez, and Barnes-Holmes (2005) showed that participants who successfully completed a complex relational task involving Same/Different and temporal relations performed significantly better on the vocabulary and arithmetic subtests of the Wechsler Adult Intelligence Scale Third Edition (WAIS-III; Wechsler, 1997) than those participants who failed to do so. In contrast, those who passed or failed obtained similar scores on the digit-symbol encoding subtest. Post hoc statistical analyses revealed significant moderately strong correlations between the percentages of correct temporal relational responses and scores on the vocabulary subtest. Weaker, but also significant, correlations were observed between performance on the relational task and scores on the arithmetic subtest.

The temporal relational task employed by O'Hora et al. employed simple geometric shapes and arbitrary symbols (e.g., ::::; see Figure 1) to train participants to use the symbols as substitutes for the words "before" and "after." Correlations between such a relatively content-free task and the vocabulary test provide support for accounts that posit relational ability as being integral to complex language performance. However, the foregoing study was limited insofar as it employed just three of the thirteen subtests of the WAIS-III. The current study employed the same temporal relational responding task but compared performance on the task to the entire battery of WAIS-III subtests. We also took advantage of the new factor structure of the WAIS-III that designates four first-order factors as indices: Verbal Comprehension, Perceptual Organization, Working Memory, and Processing Speed. The WAIS-III includes these indices to provide more homogenous sets of abilities than the traditional Verbal/Performance IQ distinction of WAIS-R (Wechsler, 1981) and earlier versions. In line with previous research on relational responding and verbal ability, it was predicted that temporal relational responding would predict performance on the Verbal Comprehension factor of the WAIS-III. In addition, from an RFT perspective, Hayes et al. (2001) have suggested that many perceptually based problem-solving tasks may actually be solved through verbal manipulation of the environment using a process called *pragmatic verbal analysis*, which relies heavily on relational responding. Thus, we also predicted that performance on the relational task would correlate with the Perceptual Organization index of the WAIS-III. Given that the temporal relational responding task does not require relational responding to occur under time constraints or for participants to remember a considerable number of items, performance in the task was not expected to predict performance in the Processing Speed and Working Memory indices.

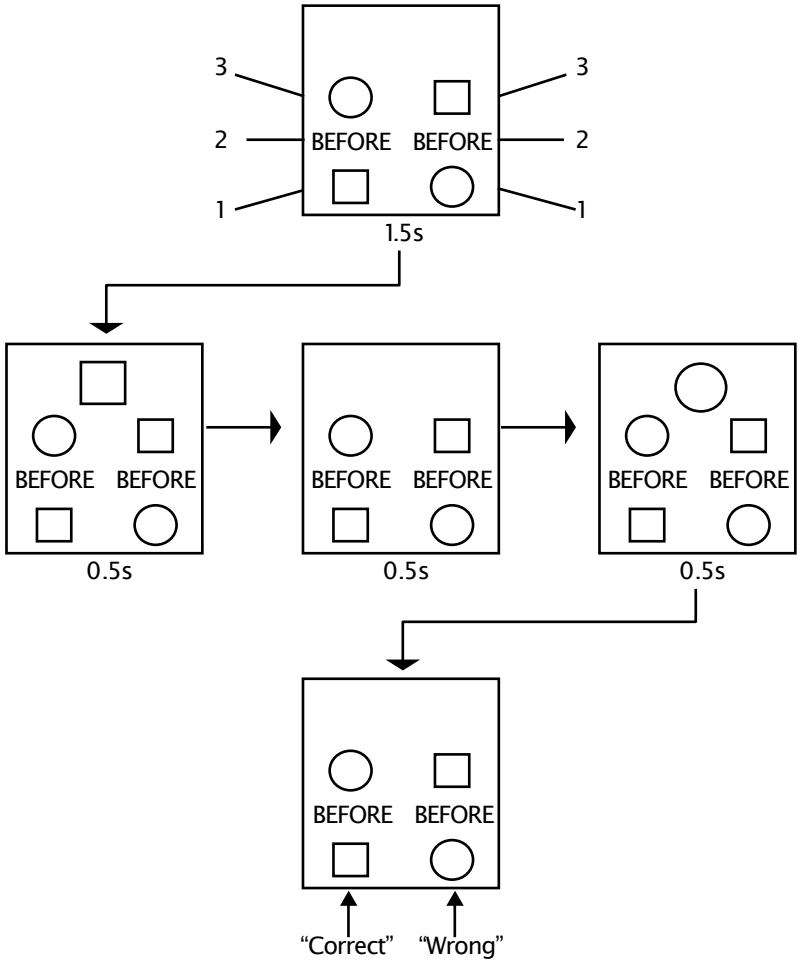

Figure 1. Outline of the Temporal Relational Task. The elements on the initial screen appeared in the order indicated (i.e., the bottom elements were presented first, followed 0.5 s later by the middle elements and then 0.5s later by the top elements. Participants were required to choose one of the two sets of stimuli in the bottom panel (reading from bottom to top: "Square Before Circle" or "Circle Before Square"), based on the order that the constituent shapes had occurred at the top of the screen (middle panels). Feedback, "Correct" or "Wrong," was then presented in the center of a clear screen. The words *Before* and *After* were not presented to subjects but are used here to indicate the functions established in arbitrary contextual cues (e.g., ::::).

Method

Participants

Eighty-one undergraduate students (66 female and 15 male) recruited from the Florida International University in Miami participated in the current study. Participants ranged in age between 18 and 48 years old (M = 24.4 years) and received course credit for their participation. All but 3 of the participants were from courses other than psychology, and none of the participants was familiar with either the WAIS-III scale or the study of derived relational responding.

Setting and Apparatus

The temporal relational responding task was presented on an Apple iMac computer with a 14-in. display in a windowless control-observational room. The letters Z, C, B, and M were identified as response keys, and they were covered by different-colored squares of masking tape (green, red, blue, and yellow, respectively). Presentation of stimuli and recording of responses were controlled by the experiment-generating software application PsyScope (Cohen, MacWhinney, Flatt, & Provost, 1993).

The WAIS-III (Wechsler, 1997) was administered in a small experimental room that contained two chairs and a small table, placed against the wall. The participant and examinee were observed intermittently through a one-way mirror.

Procedure

Temporal Relational Task. All participants were exposed to the temporal relational responding task first and then exposed to the WAIS-III. The order of presentation was not counterbalanced across participants, because it was anticipated that participant fatigue would significantly affect performance on the relational task if they were required to complete the WAIS first. In contrast, a number of features of the delivery of the WAIS are designed to reduce the effects of fatigue on performance.

To successfully complete the temporal relational responding task, participants were required to learn the temporal relational function, "before" or "after," of two abstract symbols (()() and ::::) within 12 blocks of 16 trials (see Figure 1). Participants were given minimal instructions (orientation and response requirements only) before attempting the task. At the beginning of each trial, two short "statements" gradually appeared (interstimulus interval of 0.5 s) at the bottom right and left of the screen (see top panel). Each statement was composed of two simple geometric shapes and one of the abstract symbols for "before" or "after" (e.g., square ()() circle). Once these statements were complete, two shapes (sequence stimuli) identical to the statement stimuli were presented in a sequence at the top of the screen (e.g., square … circle; center panels). Participants then chose one of the two statements at the bottom of the screen (e.g., square "before" circle *or* circle "before" square; bottom panel). The correct statement depended on the sequence of statement stimuli and the relational terms presented in each statement, and the sequence of stimuli observed at the top of the screen. For example, if a square appeared at the top of the screen followed by a circle (e.g., in the center panels in Figure 1),

then choosing "square ()() circle" (Square Before Circle) would be correct. If the participant chose the correct statement, the word "Correct" appeared in the center of a clear screen; if not, the word "Wrong" appeared.

The statements presented varied across three different trial types: Before only (e.g., circle ()() square *or* square ()() circle), After only (e.g., circle :::: square *or* square :::: circle) or Mixed (e.g., circle ()() square *or* circle :::: square). Each block of 16 trials employed two pairs of stimuli and consisted of 4 Before only, 4 After only, and 8 Mixed trials, which were counterbalanced for position and order of both the sequence and statement stimuli. Participants were deemed to have succeeded in this task if they made 15 out of 16 correct responses in a block. If a participant failed to reach this criterion after 12 blocks of trials, he or she failed the task. Whether or not the participant failed, he or she was then exposed to the full battery of WAIS-III subtests.

Two measures of performance were acquired from the temporal relational task. Participants were first classified as having passed or failed the task after 12 blocks. The percentage of trials correct during training was also employed as a measure of how quickly and easily participants identified the temporal relations and functions of the arbitrary stimuli.

WAIS-III. The WAIS-III was standardized on 2,450 adult subjects, selected according to 1995 U.S census data, and stratified according to age, gender, race and ethnicity, geographic region, and education level. The WAIS-III thus constitutes a highly reliable measure of ability or intelligence as traditionally defined. It consists of 14 subtests. Eleven of these subtests contribute to the Verbal and Performance IQ scores: Vocabulary, Comprehension, Similarities, Information, Arithmetic, and Digit Span contribute to the Verbal IQ score, and Block Design, Matrix Reasoning, Picture Arrangement, Picture Completion, and Digit-Symbol Coding contribute to the Performance IQ score (Symbol Search and Letter-Number Sequencing are not included in these scores). A different 11 subtests contribute to the index scores: Vocabulary, Similarities, and Information contribute to the Verbal Comprehension Index; Block Design, Matrix Reasoning, and Picture Completion contribute to the Perceptual Organization Index; Arithmetic, Digit Span, and Letter-Number Sequencing contribute to the Working Memory Index; and Symbol Search and Digit-Symbol Coding contribute to the Processing Speed Index (Comprehension and Picture Arrangement are not included in the index scores). A fourteenth subtest, Object Assembly, contributes to neither the IQ scores nor the indices but may be substituted for any of the Performance IQ scales. This subtest was not employed in the current study because it did not contribute to the measures of interest and we wished to reduce the length of the experiment.

Results

In the temporal relational responding task, 45 (55.6%) of the 81 participants reached the mastery criterion within 12 blocks of training and 36 (44.4%) failed to do so. This outcome replicates the findings of O'Hora et al. (2005), in which 57% of participants successfully completed the temporal relational responding task within 12 blocks of trials. The percentage of correct trials in the temporal relations task was also calculated, and, on average, participants were correct on 62.8% (SD = 14.45%) of the total trials to which they were exposed.

Full-scale intelligence scores obtained from the sample were above average (M = 112.95), as one might expect from a university population, with similar

variation (*SD* = 16.63) to that observed in the WAIS-III standardization population (*M* = 100, *SD* =15; Wechsler, 1997). This pattern was also observed for Performance IQ, but Verbal IQ and all four indices were slightly less variable than the standardization population. Average scores on the four indices were lower than those obtained for full-scale, Performance, and Verbal IQ and more similar to that of the standardization population (see Appendix 1). WAIS-III subtests are standardized to obtain a mean of 10 and a standard deviation of 3, and this pattern was approximated for most subtests, but scores for Matrix Reasoning were above average (*M* = 11.56, *SD* = 2.485) and scores for Picture Completion were below average (*M* = 8.84, *SD* = 2.879).

A one-way multivariate analysis of variance (MANOVA) was used to examine the effect of passing or failing the temporal relations task on Full-scale, Verbal, and Performance IQ, and it was found to be significant, $F(4,76) = 5.067$, $p = .003$, partial $\eta^2 = 0.165$. Tests of specific effects determined that those who passed the temporal relations task had significantly higher Full-scale, $F(1,81) = 11.847$, $p = .001$, Performance, $F(1,81) = 12.85$, $p = .001$, and Verbal IQs $F(1,81) = 5.562$, $p = .021$. Control for multiple testing was ensured by using the step-up sequential Bonferroni method proposed by Hochberg (1988).[1] Hochberg's method protects against Type I errors but is more powerful than the classical Bonferroni procedure. In contrast with our expectations, effect sizes were greater for Full-scale (partial $\eta^2 = 0.13$) and Performance IQ (partial $\eta^2 = 0.14$) than for Verbal IQ (partial $\eta^2 = 0.066$), demonstrating that relational performance was a better predictor of nonverbal scores than verbal scores.

A second one-way MANOVA examined the effect of passing or failing the temporal relations task on the four WAIS-III indices, and this was also significant $F(4,76) = 4.019$, $p = .005$, partial $\eta^2 = 0.175$. Those who passed the temporal relations task scored significantly higher on the Verbal Comprehension, $F(1,81) = 5.942$, $p = .017$, and Perceptual Organization indices, $F(1,81) = 12.199$, $p = .001$, but not on the Working Memory or Processing Speed indices. Performance on the relational task accounted for more variance in Perceptual Organization index scores (partial $\eta^2 = 0.13$) than Verbal Comprehension index scores (partial $\eta^2 = 0.07$).

The percentage of correct trials during the temporal task provided a measure of how quickly and easily participants identified and responded to the temporal relations. If relational ability were related to linguistic or cognitive performance, positive correlations would be expected between percentage of correct trials and relevant WAIS-III scores. In line with the foregoing findings, significant moderately strong correlations were obtained between percentage of correct trials during the temporal task and Full-scale ($r = 0.437$, $p < .0005$), Verbal ($r = 0.302$, $p = .006$), and Performance IQ ($r = 0.419$, $p < .0005$). Significant moderately strong correlations were also obtained between

1 In this procedure, the *p* values are arranged in ascending order (i.e., $p_1 < p_2 < p_m$. One starts by examining the largest *p* value, p_m. If $p_m \leq \alpha$ then all hypotheses are rejected. If not, the null hypothesis associated with the largest *p* value cannot be rejected and one goes on to compare p_{m-1} with $\alpha/2$. If smaller, all the hypotheses associated with p_1, p_2, p_{m-1} are rejected. If not, the null hypothesis associated with p_{m-1} cannot be rejected and one proceeds to compare p_{m-2} with $\alpha/3$ and so on. Consider the second MANOVA presented above. The largest *p* value is greater than .05 and is therefore not significant. The second largest *p* value is larger than 0.05/2 and is also not significant. The third largest *p* value (VC), however, is less than 0.05/3 and is significant. We then also reject the null hypotheses for the final hypothesis (PO). Thus, the Verbal Comprehension and Perceptual Organizational Indices are significant (at the .017 level).

relational responding and scores on the Verbal Comprehension ($r = 0.403$, $p < .0005$) and Perceptual Organization indices ($r = 0.409$, $p < .0005$), but correlations with Working Memory ($r = 0.052$) or Processing Speed indices ($r = 0.203$) were not significant.

Percentage of correct relational responding correlated significantly with five subtests (Vocabulary, Similarities, Information, Block Design, and Symbol Search; see Table 1). The pattern of correlations obtained provides support for the index factor structure that has been newly added to the WAIS-III. As can be seen in Table 1, both the Verbal Comprehension and Perceptual Organization indices correlated with percentage of correct relational responding. In addition, each of the subtests that contribute to the Verbal Comprehension index also correlated significantly with performance on the relational task. Of the remaining two significant correlations, Block Design contributes to the Perceptual Organization index and Symbol Search contributes to the Processing Speed index.

Table 1
Correlations Between Percentage of Trials Correct During the Temporal Relations Task and Scores on Subtests of the WAIS-III

Index	Subtest	Correlation (r)
Verbal Comprehension (0.403*)	Vocabulary (V)	0.325*
	Similarities (V)	0.329*
	Information (V)	0.340*
Working Memory (0.052)	Arithmetic (V)	0.058
	Digit span (V)	0.082
	Letter-number	−0.046
Perceptual Organization (0.409*)	Block design (P)	0.445*
	Matrix reasoning (P)	0.25
	Picture completion (P)	0.222
Processing Speed (0.203)	Digit symbol coding (P)	0.092
	Symbol search	0.306*
Do not contribute to index	Comprehension (V)	0.173
	Picture arrangement (P)	0.270

Note. P = subtest that contributes to the Performance IQ score, V = subtest that contributes to the Verbal IQ score. Figures in parentheses denote the correlations with the standardized index score.
*Significant at 0.05 using Hochberg (1988) correction (adjusted critical alpha = 0.0096).

Discussion

The current study showed that the ability to respond to temporal relations predicted performance on complex cognitive tasks. Specifically, participants who successfully passed the temporal relational task scored higher in the Verbal Comprehension and Perceptual Organization indices but not the Working Memory or Processing Speed indices of the WAIS-III. Furthermore, significant correlations were obtained between relational responding and each constituent subtest of the Verbal Comprehension indices, demonstrating promising within-index homogeneity. In contrast, of the ten subtests that did not contribute to this index, only two correlated significantly with performance on the temporal relational responding task. The current findings demonstrate that content-heavy tests, like those of the WAIS-III, tap certain similar resources to relatively content-free relational tasks.

The findings replicate two of the three findings of O'Hora et al. (2005). Specifically, performance on the temporal relational task correlated significantly with scores on the Vocabulary subtest but not the Digit-Symbol coding subtest. However, no significant correlation was observed in the current study between performance on the relational task and scores on the arithmetic subtest. It is unclear why this effect was not replicated. Moreover, from an RFT perspective, mental arithmetic would seem to involve relational responding (see Barnes-Holmes, Barnes-Holmes, & Cullinan, 2001). The differences across studies might be due to the different contexts within which the arithmetic subtest was presented in both studies (i.e., as part of the complete WAIS-III or as one of just three subtests presented). Further experimental analysis would be required to move from such speculation to begin to identify the relevant controlling variables. Nevertheless, the replication of the effects observed for Vocabulary and Digit Symbol Coding enhances the convergent and discriminant validity of the claim that language and relational responding are closely linked.

Participants who successfully completed the temporal relational task scored higher on the Perceptual Organization index, and their performance was strongly correlated with performance on the Block Design subtest in particular. RFT predicts such a relationship because the Block Design task relies heavily on pragmatic verbal analysis. *Pragmatic verbal analysis* is a term used in RFT to describe the occurrence of arbitrarily applicable relational responding (like the abstract relations in stimulus equivalence) under the control of nonarbitrary physical-world relations (like those in the temporal relations task). In the Block Design task, participants are required to orient up to nine blocks to create a design provided by the experimenter. The comparisons made by the participant between the stimuli in their current orientation and the required orientation, which require physical distinctions to be identified and modified toward a goal state, are thus a form of pragmatic verbal analysis. The significant moderately strong correlation obtained between the relational task and the Block design subtest supports this line of reasoning. In addition, weaker but also significant correlations were observed between performance on the temporal relational task and the two other subtests that contribute to the Perceptual Organization index. These two subtests, Matrix Reasoning and Picture Completion, would also seem to depend on pragmatic verbal analysis, and one might have expected higher correlations for these two subtests. One feature of the data that may have reduced the observed correlations was that mean scores on both these subtests were both considerably different from the mean of the standardization population. Participants in the current study were considerably better than the standardization population on Matrix Reasoning (more than 1 SD above the mean) and considerably worse on Picture Completion (almost 1 SD below the mean; see Appendix 1). This participant effect was likely due to the fact that all the participants were university students, and it may have reduced the obtained correlations. Further research is required to provide detailed explanation of what features of these tests occasion what types of relational responding and how such control is developed and maintained.

In the current study, successfully completing a temporal relational task did not correlate with the Working Memory index or with any of its constituent subscales. This finding is quite important, because it seems to conflict with Halford and colleagues' assertion that the ability to deal successfully with relations of increasing complexity requires increasing working memory (Halford, Baker, McCredden, & Bain, 2005). The current study, however, did not measure relational complexity in Halford's terms. The task employed in the current study

requires an individual to abstract the temporal relation between stimuli and to respond to temporal relations in the presence of specific stimuli, but it does not require the individual to remember any stimuli or to satisfy simultaneous relations as would be required to operationalize the levels of relational complexity proposed by Halford. Nevertheless, the task employed was explicitly relational and the pattern of correlations observed fits well with RFT predictions. The current study investigated the relational abilities of participants in the absence of working memory requirements, and thus it is likely that the variance explained by relational ability in the current study was over and above that which would have been explained by working memory. More technically, the fact that the current task does not load on working memory and yet does correlate with verbal ability suggests that there may be distinct behavioral repertoires (e.g., different types of relational responding) that contribute to different complex human behaviors (e.g., remembering and problem solving) and that these behavioral repertoires may come under distinct sources of control.

Even though performance on the relational task predicted scores on the scales that contribute to the Verbal Comprehension index, it did not predict performance on the Comprehension subscale. This subscale measures "common sense" reasoning and is very dependent on cultural knowledge. The subtest requires respondents to answer a series of questions from three areas of socially specific knowledge and is primarily employed to diagnose deficits in cognitive functioning. Questions address ways to solve specific problem situations, explanations of particular cultural phenomena, and the meanings of proverbs. In the current study, this dependence on culture-specific knowledge may have obscured any effect that relational skill would have had on this verbal task. As a further consideration, comprehension is not included in the Verbal Comprehension index, because it does not reliably correlate with the component subtests to a sufficient degree.

From a theoretical perspective, the current study does not allow us to distinguish between the various interpretations of the relationship between relational responding and language. Whether relational responding is the basis for complex language behavior, as suggested by RFT, or linguistic complexity facilitates relational complexity, one would expect the current findings. As an explanation, however, the former is preferable from a behavioral perspective, because relational responding is a discrete malleable behavioral process that can be trained and improved. Indeed, a number of studies have trained derived relational responding in young children using specific behavioral interventions (Lipkens, Hayes, & Hayes, 1993; Peláez et al., 2000). Nevertheless, further research is required to decide between the two alternative hypotheses supported by the current study. Procedures that improve the flexibility and the complexity of relational responding for individuals will empower future experimental studies to judge whether relational ability underlies linguistic ability or vice versa.

The current findings contribute to a growing literature that implicates relational responding in complex cognitive function. For instance, recent work has shown that relational responding shares a relatively discrete neural basis with complex linguistic function (Barnes-Holmes et al., 2005; Christoff et al., 2001; Dickins et al., 2001; Waltz et al., 1999; Waltz et al., 2004). Dickins et al. (2001), for example, employed functional magnetic resonance imaging to compare brain activation during a stimulus equivalence task and a verbal fluency task. Both tasks activated the dorsolateral prefrontal cortex and posterior parietal cortex bilaterally, but only the verbal fluency task activated Broca's area.

They concluded that brain activation during derived relational responding resembled activation during semantic processing. In addition, recent neurological research summarized by Batelli, Pascual-Leone, and Cavanagh (2007) suggests that the right parietal lobe is implicated in identifying *when* visual events occur. A focus on relational responding may thus improve educational interventions for individuals who exhibit degraded cognitive function due to neurological impairment. For instance, many characteristic deficits of developmentally delayed individuals have a relational quality. "Theory of Mind" deficits, for example, have been analyzed in terms of the relational reasoning required in perspective taking (Andrews, Halford, Bunch, Bowden, & Jones, 2003; McHugh, Barnes-Holmes, & Barnes-Holmes, 2004), and much research has already been conducted on isolating and remediating the deficits that impede stimulus equivalence performance in autistic and developmentally delayed individuals (see Hall, Debernardis, & Reiss, 2006; Sidman, 1994, for reviews). Finally, degradation of relational reasoning is often observed in older adults (Viskontas, Morrison, Holyoak, Hummel, & Knowlton, 2004; Waltz et al., 2004). In future, relational training procedures might be employed to delay cognitive decline and to improve our later lives.

References

ALLAN, L. G. (1979). The perception of time. *Perception & Psychophysics, 26*, 340–354.

ALLAN, L. G. (1998). The influence of scalar timing on human timing. *Behavioural Processes, 44*, 101–117.

ANDREWS, G., & HALFORD, G. S. (1998). Children's ability to make transitive inferences: The importance of premise integration and structural complexity. *Cognitive Development, 13,* 479–513.

ANDREWS, G. & HALFORD, G. S. (2002). A cognitive complexity metric applied to cognitive development. *Cognitive Psychology, 45,* 153–219.

ANDREWS, G., HALFORD, G. S., BUNCH, K. M., BOWDEN, D., & JONES, T. (2003). Theory of mind and relational complexity. *Child Development 74,* 1476–1499.

BARNES, D., MCCULLAGH, P. D., & KEENAN, M. (1990). Equivalence class formation in non-hearing impaired children and hearing impaired children. *The Analysis of Verbal Behavior, 8*, 1–11.

BARNES-HOLMES, Y., BARNES-HOLMES, D., & CULLINAN, V. (2001). Education. In S. C. Hayes, D. Barnes-Holmes, & B. Roche (Eds.), *Relational frame theory: A post-Skinnerian account of human language and cognition* (pp. 181–195). New York: Plenum.

BARNES-HOLMES, D., STAUNTON, C., WHELAN, R., BARNES-HOLMES, Y., COMMINS, S., WALSH, D., ET AL. (2005). Derived stimulus relations, semantic priming, and event-related potentials: Testing a behavioral theory of semantic networks. *Journal of the Experimental Analysis of Behavior, 84,* 417–433.

BATTELLI, L., PASCUAL-LEONE, A., & CAVANAGH, P. (2007). The "when" pathway of the right parietal lobe. *Trends in Cognitive Sciences, 11*, 204–210.

BIZO, L. A., CHU, J. Y. M, SANABRIA, F., & KILLEEN, P. R. (2006). The failure of Weber's law in time perception and time production. *Behavioural Processes*, *71*, 201–210.

BZOCH, K. R., & LEAGUE, R. (1991). *The Bzoch-League Receptive-Expressive. Emergent Language Scale* (2nd ed.). Austin, TX: Pro-Ed, Inc.

CHRISTOFF, K., PRABHAKARAN, V., DORFMAN, J., ZHAO, Z., KROGER, J. K., HOLYOAK, K. J., ET AL. (2001). Rostrolateral prefrontal cortex involvement in relational integration during reasoning. *NeuroImage, 14*, 1136–1149.

COHEN, J. D., MACWHINNEY, B., FLATT, M., & PROVOST, J. (1993). PsyScope: A new graphic interactive environment for designing psychology experiments. *Behavioral Research Methods, Instruments and Computers, 25,* 257–271.

DALE, R. (2005). Cognitive and behavioral approaches to language acquisition: Conceptual and empirical intersections. Behavior Analyst Today, 5, 336–359.

DEVANY, J. M., HAYES, S. C. & NELSON, R. O. (1986). Equivalence class formation in language-able and language-disabled children. *Journal of the Experimental Analysis of Behavior, 46,* 243–257.

DICKINS, D. W., SINGH, K. D., ROBERTS, N., BURNS, P., DOWNES, J. J., JIMMIESON, P., ET AL. (2001). An fMRI study of stimulus equivalence. *NeuroReport, 12,* 1–7.

DICKINS, T. E., & DICKINS, D. W. (2001). Symbols, stimulus equivalence, and the origins of language. *Behavior and Philosophy, 29*, 221–244.

DYMOND, S., & REHFELDT, R. A. (2000). Understanding complex behavior: The transformation of stimulus functions. *The Behavior Analyst, 23,* 239–254.

GALIZIO, M., STEWART, K. L., & PILGRIM, C. (2001). Clustering in artificial categories: An equivalence analysis. *Psychonomic Bulletin and Review, 8,* 609–614.

GENTNER, D., & RATTERMANN, M. (1991). Language and the career of similarity. In S. A. Gelman and J. P. Byrnes (Eds.) *Perspective on thought and language: Interrelations in development* (pp. 225–277). New York: Cambridge University Press.

GOSWAMI, U. (1992). *Analogical reasoning in children.* Hove, UK: Erlbaum.

GOSWAMI, U. (1995). Transitive relational mappings in 3- and 4-year-olds: The analogy of Goldilocks and the three bears. *Child Development, 66,* 877–892.

GRONDIN, S. (2001). From physical time to the first and second moments of psychological time. *Psychological Bulletin*, *127*, 22–44.

HALFORD, G. S. (1982). *The development of thought.* Hillsdale, NJ: Lawrence Erlbaum Associates.

HALFORD, G. S. (1992). Analogical reasoning and conceptual complexity in cognitive development. *Human Development*, *35*, 193–217.

HALFORD, G. S., BAKER, R., MCCREDDEN, J. E., & BAIN, J. D. (2005). How many variables can humans process? *Psychological Science, 16*, 70–76.

HALFORD, G. S., WILSON, W. H., GUO, J., GAYLER, R. W., WILES, J., & STEWART, J. E. M. (1994). Connectionist implications for processing capacity limitations in analogies. In K. J. Holyoak & J. Barnden (Eds.), *Advances in connectionist and neural computation theory, vol. 2: Analogical connections* (pp. 363–415). Norwood, NJ: Ablex.

HALL, S. S., DEBERNARDIS, G. M., & REISS, A. L. (2006). The acquisition of stimulus equivalence in individuals with fragile X syndrome. *Journal of Intellectual Disabilities Research*, *50,* 643–651.

HAYES, S. C., BARNES-HOLMES, D., & ROCHE, B. T. (2001). *Relational frame theory: A post-Skinnerian account of human language and cognition.* New York: Plenum.

HAYES, S. C., & HAYES, L. J. (1992). Verbal relations and the evolution of behavior analysis. *American Psychologist, 47*, 1383–1395.

HOCHBERG, Y. (1988). A sharper Bonferroni procedure for multiple tests of significance. *Biometrika*, 75, 800–802.

LIPKENS, G., HAYES, S. C., & HAYES, L. J. (1993). Longitudinal study of derived stimulus relations in an infant. *Journal of Experimental Child Psychology, 56*, 201–239.

MARCUS, G. F., VIJAYAN, S., BANDI RAO, S., & VISHTON, P. M. (1999). Rule learning by seven-month-old infants. *Science*, 283, 77–80.

MCHUGH, L., BARNES-HOLMES, Y., & BARNES-HOLMES, D. (2004). Perspective-taking as relational responding: A developmental profile. *The Psychological Record*, *54*, 115–144.

O'HORA, D., PELÁEZ, M., & BARNES-HOLMES, D. (2005). Derived relational responding and performance on verbal subtests of the WAIS-III. *The Psychological Record, 55,* 155–175.

PELÁEZ, M., GEWIRTZ, J. L., SANCHEZ, A., & MAHABIR, N. M. (2000). Exploring stimulus equivalence formation in infants. *Behavior Development Bulletin, 9*, 20–25.

RATTERMANN, M. J., & GENTNER, D. (1998). More evidence for a relational shift in the development of analogy: Children's performance on a causal-mapping task. *Cognitive Development, 13,* 453–478.

REESE, H. W. (1968). *The perception of stimulus relations: Discrimination learning and transposition.* New York: Academic Press.

SIDMAN, M. (1994). *Equivalence relations and behavior: A research story.* Boston: Author's Cooperative.

SUGARMAN, S. (1982). Developmental change in early representational intelligence: Evidence from spatial classification strategies and related verbal expressions. *Cognitive Psychology, 14*, 410–449.

VISKONTAS, I. V., MORRISON, R. G., HOLYOAK, K. J., HUMMEL, J. E., & KNOWLTON, B. J. (2004). Relational integration, inhibition, and analogical reasoning in older adults. *Psychology and Aging, 19,* 581–591.

WALTZ, J. A., KNOWLTON, B. J., HOLYOAK, K. J., BOONE, K. B., MISHKIN, F. S., DE MENEZES SANTOS, M., ET AL. (1999). A system for relational reasoning in human prefrontal cortex. *Psychological Science, 10,* 119–125.

WALTZ, J. A., KNOWLTON, B. J., HOLYOAK, K. J., BOONE, K. B., BACK-MADRUGA, C., MCPHERSON, S., ET AL. (2004). Relational integration and executive function in Alzheimer's disease. *Neuropsychology, 18,* 296–305.

WEARDEN, J. H. (1991). Do humans possess an internal clock with scalar timing properties? *Learning and Motivation*, *22*, 59–83.

WEARDEN, J. H. (1999). "Beyond the fields we know . . .": Exploring and developing scalar timing theory. *Behavioural Processes*, *45*, 3–21.

WECHSLER, D. (1981). *WAIS-R manual: Wechsler adult intelligence scale-revised.* San Antonio, TX: The Psychological Corporation.

WECHSLER, D. (1997). *Wechsler adult intelligence scale—Third edition.* San Antonio, TX: The Psychological Corporation.

YOUNGER, B. (1993). Understanding category members as "the same sort of thing": Explicit categorization in ten month infants. *Child Development, 64,* 309–320.

Appendix

Descriptive Statistics of Performance on the WAIS-III

	N	Minimum	Maximum	Mean	Standard Deviation
Correct Relational Trials (%)	81	40.63	93.75	62.785	14.504
Full-Scale IQ	81	84	151	112.95	16.630
Verbal IQ	81	83	138	111.51	11.036
Performance IQ	81	85	155	115.20	16.049
Verbal Comprehension	81	72	134	101.15	11.091
Perceptual	81	74	133	99.64	12.585
Working Memory	81	75	128	100.25	10.632
Processing Speed	81	68	137	101.38	14.725
Vocabulary	81	5	17	10.68	2.036
Similarities	81	5	17	9.85	2.550
Information	81	5	16	10.28	2.346
Arithmetic	81	4	14	9.91	2.111
Digit Span	81	4	17	10.47	2.627
Letter-Number	81	5	16	9.94	2.051
Block Design	81	5	16	9.67	2.650
Matrix Reasoning	81	4	17	11.56	2.485
Picture Completion	81	2	15	8.84	2.879
Digit Symbol Coding	81	3	16	10.20	3.199
Symbol Search	81	4	17	10.35	2.642
Picture Arrangement	81	5	17	10.35	2.997
Comprehension	81	3	18	10.32	2.366