Southern Illinois University Carbondale
OpenSIUC

Articles | Department of Plant, Soils, and Agricultural Systems

1-1-2009

Different Responses of Two Genes Associated with Disease Resistance Loci in Maize (Zea mays L.) to 3-allyloxy-1,2-benzothiazole 1,1-dioxide

Jiazheng Yuan

Jennifer Tedman

Liakat Ali

Jie Liu

Jeff Taylor

See next page for additional authors

Follow this and additional works at: http://opensiuc.lib.siu.edu/psas_articles
Published in *Current Issues in Molecular Biology*, (2009) 11 (Suppl. 1): i85-94

Recommended Citation
Yuan, Jiazheng; Tedman, Jennifer; Ali, Liakat; Liu, Jie; Taylor, Jeff; Lightfoot, David A.; Iwata, Michiaki; and Pauls, K. Peter, "Different Responses of Two Genes Associated with Disease Resistance Loci in Maize (Zea mays L.) to 3-allyloxy-1,2-benzothiazole 1,1-dioxide" (2009). *Articles.* Paper 6.
http://opensiuc.lib.siu.edu/psas_articles/6

This Article is brought to you for free and open access by the Department of Plant, Soils, and Agricultural Systems at OpenSIUC. It has been accepted for inclusion in Articles by an authorized administrator of OpenSIUC. For more information, please contact jnabe@lib.siu.edu.

Authors
Jiazheng Yuan, Jennifer Tedman, Liakat Ali, Jie Liu, Jeff Taylor, David A. Lightfoot, Michiaki Iwata, and K. Peter Pauls

This article is available at OpenSIUC: http://opensiuc.lib.siu.edu/psas_articles/6

Different Responses of Two Genes Associated with Disease Resistance Loci in Maize (*Zea mays* L.) to 3-allyloxy-1,2-benzothiazole 1,1-dioxide

Jiazheng Yuan[1,2], Jennifer Tedman[1], Liakat Ali[1], Jie Liu[1], Jeff Taylor[1], David Lightfoot[2], Michiaki Iwata[3], and K. Peter Pauls*[1]

[1]Department of Plant Agriculture, University of Guelph, Guelph, ON, N1G 2W1 Canada
[2] Department of Plant, Soil and Agriculture Systems, Southern Illinois University at Carbondale, Carbondale, IL 62901, USA
[3]Agricultural & Veterinary Research Labs, Agricultural & Veterinary Division, Meiji Seika Kaisha, Ltd, 760 Morookacho, Kohokuku, Yokohama, 222-8567, Japan

Received 17 September 2008
Revised 18 October 2008
Accepted 20 October 2008

Abstract

Probenazole (3-allyloxy-1,2-benzothiazole 1,1-dioxide, PBZ) is a bactericide and fungicide that acts by inducing plant defense systems. It has been shown to induce the expression of NBS-LRR genes like *RPR1* (rice probenazole-response gene) in rice (*Oryza sativa* L.) and systemic acquired resistance (SAR)-like disease resistance. Two maize (*Zea mays* L.) genes *Zmnbslrr1* (a NBS-LRR gene, cloned from a disease resistance analog PIC11 based) and *Zmgc1*, (a putative guanylyl cyclase-like gene) have both been associated with quantitative resistance loci (QTL) for resistance to *Fusarium graminearum*. PIC11 was associated with Fusarium stalk rot and ZmGC1 showed resistance to Gibberella ear rot caused by *F. graminearum*. The objectives of the current study here were to characterize the *Zmnbslrr1* gene and to determine whether it and *Zmgc1* respond to the inducer PBZ. The transcript abundance of *Zmnbslrr1* expression was significantly reduced in corn seedlings of the Gibberella ear rot resistant genotype CO387 48 h after PBZ treatment. In contrast, the transcript abundance of the maize *Zmgc1* gene increased more than 10-fold 8h after the treatment. Therefore, the two genes do not appear to be coordinately regulated by PBZ.

Keywords: maize, *Zmnbslrr1*, *Zmgc1*, probenazole

Introduction

Plants utilize chemical barriers, consisting of antimicrobial compounds, physical barriers such as reinforced cell walls, and sensing barriers, including arrays of resistance (R) genes, to prevent pathogen infection (Dangl and Jones, 2001). Pathogen infestation can cause accumulations or reductions in transcript levels (Iqbal *et al*., 2005). Plant disease resistance and response genes can be classified into many distinct groups based on the characteristics of the proteins that they encode and the regulons that control their expression. The largest group of such genes encodes proteins with a nucleotide binding site (NBS) motif in the amino-terminal domain followed by a variable number of leucine rich repeats (LRRs) domain in carboxy-terminal domain (Meyers *et al*., 2003; Belkhadir *et al*., 2004). The NBS domain may function in ATP hydrolysis and signal transduction while the LRR is hypothesized to be responsible for recognizing a pathogen derived signal (Belkhadir *et al*., 2004). NBS-LRR genes are wide-spread in plants and may also be involved in plant development and responses to abiotic stresses (Michelmore, 2000).

In some situations, a single resistance gene might provide protection against one or more strains of a particular pathogen when introduced into a susceptible plant of the same species. However, many disease resistance genes recognize only very limited number of pathogen isolates and therefore, they are the quickly defeated by co-evolving pathogens (Pink, 2002). The evolutionary tug of war, often called the “Red Queen Hypothesis” assumes that plant pathogens will constantly evolve to overcome plant defense barriers (Clay and Kover, 1996).

For a more sustainable plant pathogen management system, partial resistance combined with chemical control may be an option. Probenazole (3-allyloxy-1,2-benzisothiazole 1,1-oxide; PBZ) has been widely used with partially resistant rice (*Oryza sativa*) cultivars to control rice blast disease for decades in Asia (Watanabe *et al*., 1979). PBZ induces systemic acquired resistance (SAR)-like disease resistance in rice (Sakamoto *et al*., 1999). PBZ was registered for use in several other crops mainly against bacterial pathogens (Oostendorp *et al*., 2001). The main metabolites of probenazole in rice are 2-sulfamoylbenzoate, saccharin, and N-D-glucopyranosylsaccharin (Uchiyama *et al*., 1973). Part of the effect of PBZ against pathogens may be due to weak fungitoxicity against the rice pathogen *Pyricularia oryzae*.

However, similarities between probenazole induced SAR-like resistance and the SAR-like resistance induced by pathogen suggested that the protective effects of the chemical were mainly due to activation of host defense mechanism. Treated plants respond more quickly to infection (Langcake *et al*., 1983). Sakamoto *et al*., (1999) identified a gene, named the *RPR1* (rice probenazole responsive) gene, which was induced by treatment

*For correspondence: ppauls@uoguelph.ca
Tel: 519–824–4120X52460
Fax: 519–763–8933

with probenazole, other chemical inducers of systemic acquired resistance (SAR) such as benzothiadiazole (BTH) and salicylic acid (SA), as well as pathogens. The RPR1 protein contained NBS and LRR domains similar to several known R gene products such as RPM1 (Grant *et al*., 1995), Tobacco N (Whitham *et al*., 1994), and Mi (Rossi *et al*., 1998). PR1 has antifungal activities and its synthesis serves as a biomarker of plant responses to pathogens (Durner *et al*., 1998; Ryals *et al*., 1996). In addition, enhanced activity of cell membrane GTPase (EC number: 3.6.5.5), an enzyme involved in intracellular signal transduction pathways, has been observed in rice plants treated with probenazole (Kanoh *et al*., 1993).

Guanylyl cyclases (EC 4.6.1.2 also called guanylate cyclases) catalyze the formation of guanosine 3′,5′-cycline monophosphate (cGMP) from guanosine 5′-triphosphate (GTP; Bowler *et al*., 1994). cGMP is a ubiquitous second messenger in plants (Bowler *et al*., 1994) and Durner *et al*., (1998) demonstrated that it functions as a second messenger in the induction of PAL (phenylalanine ammonia lyase) by exogenous nitric oxide (NO). Therefore, cGMP was associated with the synthesis of phenylpropanoid products and defense functions. In addition, reactive oxygen intermediates (ROI) induce hypersensitive cell death by raising cytosolic calcium (Levine *et al*., 1996) and NO can reduce the threshold for calcium signaling by modulating cGMP-gated ion channels (Berridge, 1993).

Fusarium graminearum, Schwabe infects a wide variety of cereal grains, including: rye, barley, wheat, oats, and maize. The pathogen causes Gibberella ear rot and Fusarium stalk rot in maize and wheat and barley head blight in temperate areas (Desjardins, 2003). Gibberella ear rot is characterized by the growth of reddish-white mold beginning at the tip of the ear that can cover the entire ear (Sutton, 1982). Infected grain contains mycotoxins, such as deoxynivalenol (DON, vomitoxin) and zearalenone (ZEN) (Greenhalgh *et al*., 1983; Molto *et al*., 1997). Consumption of contaminated food is dangerous to livestock and humans. Mycotoxin contaminated grain fed to livestock (especially swine) induces emesis characterized by vomiting, feed refusal, and decreased weight gain (Christensen and Meronuck, 1986).

Resistance to Gibberella ear rot in maize is quantitative (partial), specific to the mode of fungal entry (silk channels or kernel wounds) and is highly influenced by the environment (Sutton, 1982; Reid *et al*., 1996; Chungu *et al*., 1996; Ali *et al*., 2005). Partial resistance to the related *Fusarium* pathogens of legumes, including *Nectria hematococca* and *Fusarium solani* f. sp. *glycines* (now *Fusarium virguliforme* Roy [Aoki]), has been shown to prevent the loss of transcripts from genes like PAL, CHS, and PR1 in their host species during infection (Covert *et al*., 2001; Iqbal *et al*., 2005). The molecular mechanism of Gibberella ear rot resistance in maize is still not well characterized.

Maize NBS-LRR resistance gene analogue (RGA) PIC11 (Collins *et al*., 1998) was mapped to chromosome 5. It was located a genomic region that defined a QTL associated with corn Gibberella stalk rot resistance (Pe *et al*., 1993). A maize gene (*Zmgc1*) encoding a putative 267-amino acid guanylyl cyclase-like protein (ZmGC) was shown to be significantly associated with Gibberella ear rot across different environments. (Yuan *et al*., 2008). The *Zmgc1* coding sequences were identical in a Gibberella ear rot-resistant line (CO387) and a susceptible line (CG62) but several differences in nucleotide sequences were identified in their UTRs and introns. Infection with *F. graminearum* increased the transcript abundance of *Zmgc1* in both genotypes within hours (Yuan *et al*., 2008).

A 1674 bp genomic DNA fragment encoding an open reading frame (ORF, *Zmnbslrr1*) was isolated in our current work based on the sequence information of the RGA PIC11 to investigate the role of this gene in Gibberrella ear rot resistance and to test its inducibility by PBZ. The Blast results indicate that the ORF is an NBS-LRR gene shared the most significant similarity with genes that possess motifs of nucleotide binding sites (NBS) and leucine-rich repeats (LRR) including RPR1 (protein induced in rice treated with probenazole) (Sakamoto *et al*., 1999), LRR19 (Madsen *et al*., 2003), and RXO1 (Zhao *et al*., 2005). The overall objective of the current study was to determine whether probenazole treatment could affect the activity of two genes that were associated with resistance to *F. graminearum.* We found that the *Zmnbslrr1* and *Zmgc1* genes responded to probenazole differently, suggesting that the two genes were not regulated in the same way by PBZ.

Materials and methods

Plant materials

Maize seeds were from a F_5 recombinant inbred (RI) population (n = 144) was derived by single seed descent from a cross between the inbred lines, CG62 and CO387 (Ali *et al*., 2005). CG62 was developed at the University of Guelph from Pioneer 3902 (Lee *et al*., 2001) and is susceptible to *F. graminearum* after silk or kernel inoculation (Ali *et al*., 2005). CO387, developed at Agriculture and Agri-Food Canada (AAFC, Ottawa, ON), has resistance to Gibberella ear rot following silk or kernel inoculation (Reid *et al*., 1994; Reid and Hamilton, 1996). This F_5 population was previously genotyped with 162 molecular markers and phenotyped for Gibberella ear rot disease in 4 environments, resulting in the identification of 18 QTL for resistance to *F. graminearum* (Ali *et al*., 2005).

Nucleic acid isolation

DNA for cloning the *Zmnbslrr1* gene and gene mapping was obtained from maize (*Zea mays* L.) leaf samples. The leaves were harvested from field-grown plants (F_5), freeze-dried, and ground to fine powder. DNA was extracted from the powdered leaf material using the CTAB (Cetyltrimethyl ammonium bromide) method (Hoisington *et al*., 1994). The DNA was treated with RNase and stored in Tris-EDTA buffer.

To collect RNA samples, seeds of inbred CO387 were germinated in a commercial soil mixture (Terra-lite Redi-earth, WR Grace & Co., Canada Ltd., Ajax, ON). The pots (30 x 30 x 5cm) were maintained in a greenhouse kept at 24ºC with 800 microeinsteins/m^2/sec of light on a 16-h photoperiod. Two-week-old seedlings were arranged in

a completely randomized design and sprayed with 2% (w/w) probenazole (Meijiseika Co., Tokyo, Japan) to foliar runoff. At intervals starting before the chemical spray and ending 6 days after the treatment, plants were harvested to obtain leaf samples. Three plants were harvested for the treatment at each time points. The plant tissues were immediately frozen in liquid nitrogen and kept at –80ºC. Total RNA was isolated using the RNeasy plant mini kit (Qiagen, Mississauga, ON) in combination with DNase treatment using RNase-free DNase kit (Qiagen GmbH, Hilden, Germany), according to the manufacturer's instructions.

Genome walking and sequence analyses

Primers were synthesized by Sigma-Aldrich (Sigma-Aldrich, Mississauga, ON). The universal GenomeWalker™ kit (BD Biosciences, Palo Alto, CA) was used to obtain sequences adjacent to the previously characterized 420 bp PIC11 (RGA) fragment (Collins *et al*., 1998). In short, DNA libraries were constructed by digesting genomic DNA with four different restriction enzymes (in 100 µl mixtures containing 3 µg of genomic DNA, 80 units of restriction enzyme and 1× restriction buffer) and adaptors were ligated to the ends of the fragments according to manufacturer's instructions. Several GC rich (>40%) gene specific primers (gsps, 26–30 bp) were designed for Genome-walking on both directions based on sequence information for the 420 bp PIC11 RGA fragment (Collins *et al*., 1998). The outer adaptor primer (AP1) provided in the kit, a gene-specific primer gsp1 (5′-TGACATGCTTGCTCTCTGATCTATTAGCT-3′) and DNA of each of the libraries were used for the primary PCR reaction. A single, major PCR product from at least one of the four libraries was gel purified using a gel purification kit (Qiagen, Mississauga, ON), cloned into TOPO TA using the TOPO cloning kit (Invitrogen, Burlington, ON) and introduced into *Escherichia coli* One-Shot competent cells according to the manufacturer's instructions (Invitrogen, Burlington, ON). Several clones were picked and plasmid DNA was isolated with a Qiagen Miniprep Kit (Qiagen, Mississauga, ON). Cloned fragments were sequenced with a CEQ2000 sequencer (Beckman-Coulter, Fullerton, CA) after dideoxy nucleotide sequencing reaction using DTCS Quick Start sequencing kit (Beckman-Coulter, Fullerton, CA). All of the DNA fragments began in a known sequence in GSP1 and extended into the unknown adjacent genomic DNA. The new sequence information was used to design new gene specific primers for further walking.

Primers PIC11-F 5′-ATTCAGACATGGCA GATGCCCTATTTGTA-3′, and PIC11-R 5′-GTCCC TCTACTTACACCGCGAACTACCTA-3′ were used to obtain a PCR fragment encompassing the complete open reading frame of the *Nbslrr1* gene from CO387 genomic DNA after three steps of GenomeWalking. The final amounts in the PCR mixture used to clone the entire gene were: 10–20 ng template, 0.4 M of each primer, 1× PCR buffer, 2 mM $MgSO_4$, 0.2 mM dNTP and 1 unit high fidelity Platinum *Taq* (Invitrogen, Burlington, ON). The reaction was performed under the following conditions: denaturation at 94ºC for 3 min, 35 cycles with denaturation at 94ºC for 30 s, annealing at 55–65ºC for 45 s, extension at 68ºC for 3–6 min and a final hold at 10ºC. The PCR samples were electrophoresed through 0.8 % (w/v) agarose gels, stained with 0.5 µg/ml ethidium bromide and visualized under UV light. The DNA fragment was cut from the gel, purified, cloned, and sequenced as described in the preceding section.

RFLP and SCAR analyses

Genomic DNA samples (20 µg) from lines in the population were digested with restriction enzymes (30 units of *Eco*RV), and fractionated by electrophoresis through 0.8 % agarose gels. The gels were stained with ethidium bromide, visualized under UV light and the DNA was transferred onto nylon membranes (Hybond-N+; Amersham Biosciences, Arlington Heights, IL) using protocols recommended by the manufacturer. The forward primer (RFLP-PIC11-F 5′-CTAATAGATCAGAGAGCAA GCA-3′) and the reverse primer (RFLP-PIC11-R 5′-GTTCCCAGGATTCAGCATATTG-3′) for the 420 bp PIC11 fragment were used with genomic DNA to PCR amplify a probe for hybridization. The RFLP probe was labeled Digoxigenin-11-dUTP into the PCR reaction. The membranes were pre-hybridized overnight at 37–42ºC in DIG Easy-Hyb solution and hybridized in DIG Easy Hyb solution containing the PIC11 probe for at least 24 hours at 37–42ºC according to the instructions of manufacturer (Boehringer Mannheim, Germany). After several washings with 2X SSC in room temperature and 0.5X SSC at 65ºC, the hybridization pattern was visualized by chemiluminescence (with CDP-star as the substrate, Roche Diagnostics, Laval, PQ) and recorded by exposure of X-ray film (Kodak Inc., Rochester, NY).

A SCAR (sequence-characterized amplified region) marker, developed from the total *Zmnbslrr1* sequence fragment, was used to screen entire mapping population (data not shown). The 2100 bp fragment was PCR amplified using primers SCAR-PIC11-F 5′- ACTGGGCATGAAGGGTACTAG-3′ and SCAR-PIC11-R 5′- CTTAATCAGGTCCCTGGTTAGT-3′. The PCR conditions were as following: denaturation at 94ºC for 3 min, 35 cycles with denaturation at 94ºC for 30 s, annealing at 60–65ºC for 45 s, extension at 72ºC for 3 min and final hold at 10ºC. Following amplification, the samples were electrophoresed through 0.8 % (w/v) agarose gels, stained with 0.5 µg/ml ethidium bromide and visualized under UV light.

Mapping population and statistic analysis

PIC11 (Zmnbslrr1 anchored) was mapped by adding the RFLP and SCAR F5 segregation data was to the previous scores for RAPD, RFLP, SSR and SCAR markers for the individuals in the CG62 x CO387 RIL population (Ali *et al*., 2005) and reanalyzing linkages with MAPMAKER/EXP version 3.0b (Lander *et al*., 1987) with the Kosambi mapping function (Kosambi, 1944). Linkage groups were identified using the "Group" command with a LOD score of 4.0 – 6.0 and a recombination fraction of 0.4 (Ali *et al*., 2005). The *Zmnbslrr1* (PIC11) derived RFLP markers were added to existing linkage groups with the "Try" command. To determine the locations of the QTL on the map and estimate their phenotypic effects, composite interval mapping (CIM) was performed using QTL

Cartographer V2.0 (Wang *et al*., 2006; Ali *et al*., 2005). The chromosome orientations followed the Intermated B73 x Mo17 (IBM) maize map (Davis *et al*., 1999; http://www.maizegdb.org) with the lowest bin positions at the top. The PIC11-RFLP and SCAR marker were evaluated individually by χ^2 analyses for goodness of fit against a 1:1 segregation ratio at a 0.01 probability level. The RFLP and SCAR associations with *F. graminearum* resistance were tested by a single marker analysis using an ANOVA (V8.2, SAS Institute, Cary, NC, USA).

BLAST searches were performed with default settings using the National Center for Biotechnology (NCBI) search engine (http://www.ncbi.nlm.nih.gov/BLAST). Sequence alignments and phylogenetic analyses were performed by using Clustal W (Thompson *et al*., 1994) for nucleotide and Clustal X (Thompson *et al*., 1997) for amino acid with default settings at site of the European Bioinformatics Institute (http://www.ebi.ac.uk/clustalw).

Real-time PCR quantification

A Ribogreen RNA quantitation kit (Molecular Probes, OR) and a Wallace Victor microplate reader (Perkin-Elmer Life Sciences, St. Laurent, PQ) with the lamp filter F485 nm and the emission filter F530 nm were used to quantity the RNA. RNA quality (ribosomal band integrity) was determined by separating 2 µg of total RNA on 1× TBE of 0.8% (w/v) agarose gel and staining with 0.5 µg/ml ethidium bromide. Reverse transcription was carried out using 1 µg of total RNA for all samples with the Restroscript kit at 50ºC for one hour and 92ºC for 5 min, following manufacturer's instruction (Ambion, Austin, TX).

Quantitative real-time PCR was carried out with an iClycler (BIO-RAD Laboratories, Mississauga, ON) with the Real-time Optical Module (BIO-RAD Laboratories, Mississauga, ON) and a SYBR Green Supermix kit (BIO-RAD). The real-time PCR primers that were used were: Zmgc1-Realtime-F 5′-ACAACAGCACAACG ATGAGCCTGACTAC-3′ and Zmgc1-Realtime-R 5′-ATTTGCGGGCCTCGTCCAAGCTCTTCATTG-3′, which were based the sequences obtained for exon 6 and exon 8 of the *Zmgc1* gene, respectively, and Zmnbslrr1-realtime-F 5′-AGCTAATAGAT CAGAGAGCAAGCATGTCA-3′ and Zmnbslrr1-realtime-R 5′-TCCTTTCTCCGAGTAGTTATCAGCACTTTG-3′. Both real time PCR products were approximately 150 bp. The final 20 µl PCR reaction mixture contained: 2 µl of cDNA, 4 nM primers and 10 µl 2X SYBR green supermix (BIO-RAD, Hercules, CA). Gene copy number was calculated using a standard curve method with regression equations generated by iCyclerIQ™ the on the iCycler (BIO-RAD Laboratories, Mississauga, ON). The internal standard used to normalize the results was a fragment amplified with primers derived from the maize 18S rRNA (F: 5′-TAGTTAGCAGGCTGAGGTCTCG;-3′; R: 5′-CTTACCAGGTCCAGACATAGC-3′). A melting curve analysis was performed to distinguish non-specific amplification from target amplicons by heating reaction from 50ºC to 95ºC at a rate of 0.5ºC/s. All three biological samples obtained at each time interval were run in triplicate, as were samples for generating the standard curve and the no template controls. Analysis of variance (ANOVA) with Tukey's HSD test was employed to determine the differences between treatment intervals.

Results

Gene structure of Zmnbslrr1 and Zmgc1 gene

In total 2300 bp of genomic DNA from the downstream and upstream of the 420 bp PIC11 RGA fragment (Collins *et al*., 1998) was cloned and sequenced by performing genome walking steps with genomic DNA from genotype CO387 (data not shown). A 1674 bp open reading frame (ORF, *Zmnbslrr1*) was identified in the sequence (Fig. 1). The region upstream of the gene was GC-rich and appears to be a TATA-less promoter (Smale, 1997). The ORF was not interrupted by introns. *Eco*RV digested CO387 and CG62 genomic DNA samples were probed with the DIG labeled 420 bp PIC11 fragment (Collins *et al*., 1998) that gave a single band of different sizes. Parent CO387 sample had upper band whilst parent CG562 samples had lower band (Fig. 2A). The RILs derived from a cross between these inbred lines had either the parental patterns or heterozygote for the two patterns (Fig. 2A).

A SCAR marker was developed for the *Zmnbslrr1* sequence that showed a 2100 bp band in CO387 and no band in CG62 (Fig. 2B).

An analysis of the predicted amino acid sequence for the ZmNBSLRR1 protein indicated that it shared a large number of homologies with NBS-LRR-like disease resistance genes found in rice, barley, wheat, and other crops. Alignment of conserved regions among resistance gene products revealed that the putative amino acid residues of ZmNBSLRR1 matched the consensus sequence found among resistance genes. Fig. 3A showed the significant similarity between the ZmNBSLRR1 amino acid sequence and the products of NBS-LRRs resistance genes such as RPR1 (BAA75812; Sakamoto *et al*., 1999), LRR19 (AAK20736; Feuillet *et al*., 2001), RXO1 (AAX31149; Zhao *et al*., 2005), OS-NB-ARC (ABA92222; Buell *et al*., 2005) and HV-NBS-LRR (CAD45036; Madsen *et al*., 2003). The ZmNBSLRR1 possessed an ATP/GTP-binding motif (Traut, 1994) in the N-terminus that was composed of a P-loop domain (Saraste *et al*., 1990) at residues 201–211, a kinase 2 domain at 278–290 and followed by PLGL domain at 371–383. However, the *Zmnbslrr1* showed a reduced domain in the C-terminus and imperfect LRRs (Fig. 3B). Those similar genes all belonged to the CC-NBS-LRR gene family. Clustal analysis demonstrated that *Zmnbslrr1* was not most closely related with RPR1. Since RPR1 was induced by probenazole (Fig. 4), *Zmnbslrr1* may be more functionally close to barley NBS-LRR (Madsen *et al*., 2003).

Our previous study (Yuan *et al*., 2008) showed that genomic DNA of *Zmgc1* gene spanned 3.3 kb while cDNA clones were 1.3 kb and contained a predicted protein of 267 amino acids (Yuan *et al*., 2008). In the upstream of the gene coding sequence, the gene contained GC-rich sequences and no obvious TATA box was identified. The complete nucleotide sequence consisted of nine exons

```
   1  ATGGCAGATG CCCTATTTGT AGTTCTTAGT AAACTTGCTG ATTCCTTGGG
     M  A  D  A   L  F  V   V  L  S   K  L  A  D   S  L  G
  51  AGAACAGACA CTAGAGAGGA TTAGCACAAA GCTGATTGAA GTAGCACCAG
       E  Q  T   L  E  R  I   S  T  K   L  I  E   V  A  P  V
 101  TTTTGACAGA TTTTGAGCAT AGCATGAAGC AAATCGAGGC TGAGCTATTG
       L  T  D   F  E  H   S  M  K  Q   I  E  A   E  L  L
 151  ATTCTTCAGG CTTTTATTGC ACAGGTTGGG ACAAAAGTCG GTGATAAGGC
     I  L  Q  A   F  I  A   Q  V  G   T  K  V  G   D  K  A
 201  ATTTGA TGCC TGGCTGGACC AAGTGAGAGA TGTTGCCCAT GAGGTAGAAG
       F  D  A   W  L  D  Q   V  R  D   V  A  H   E  V  E  D
 251  ACATCATTGA TGAGTATGCT TACCTTGAGG TTCAAGCCGT GGATACTGGC
       I  I  D   E  Y  A   Y  L  E  V   Q  A  V   D  T  G
 301  AGCTTCTTTA A   GAGGAAGTT CCTTCAGATA AAAAAGTTCG CTGCATGGCA
     S  F  F  K   R  K  F   L  Q  I   K  K  F  A   A  W  Q
 351  GAAGTTTCAT AGCCAGATCA GTCATGTAGA AGCTCGAATT CAGAGGCTAG
       K  F  H   S  Q  I  S   H  V  E   A  R  I   Q  R  L  G
 401  GTGAAATTAG GAATCGA    TAT GGCATCTTGT CAGGTGAAAT AGACAGGAGT
       E  I  R   N  R  Y   G  I  L  S   G  E  I   D  R  S
 451  AAGAAATTGA GGAGCCCCAA TCGGCTCTTT ATGTCAGATT CTTCTTACTT
     K  K  L  R   S  P  N   R  L  F   M  S  D  S   S  Y  L
 501  AACTGATAAC TCTGAAATAG TG     GGGCATGT TGATGAAATT GGAAGATTGA
       T  D  N   S  E  I  V   G  H  V   D  E  I   G  R  L  T
 551  CACAGTGGTT ACTTGAGTAC AAACAAGAGC GAACTCTTAT TGCCGTTTTT
       Q  W  L   L  E  Y   K  Q  E  R   T  L  I   A  V  F
 601  GGTATGGGAG GTTCAGGAAA AACTACTA      TT GCAAGCAGTG CATACAAGAG
     G  M  G  G   S  G  K   T  T  I   A  S  S  A   Y  K  S
 651  TCAAAAGATC ACAAGGACTT TCAATTGTCA TGCATGGGTT ACTGTATCTC
       Q  K  I   T  R  T  F   N  C  H   A  W  V   T  V  S  Q
 701  AGACTTACCA AGTTGAAGAA CTACTAAGAG AAA        TCATAAA TC  AGCTAATA
       T  Y  Q   V  E  E   L  L  R  E   I  I  N   Q  L  I
 751  GATCAGAGAG CAAGCATGTC A     AGTGGGTTT ATGACTATGA GCGGCTTGAG
     D  Q  R  A   S  M  S   S  G  F   M  T  M  S   G  L  R
 801  GCTAGTTGAG GTAGTACAAA GCTATTTGC       A AGATAAAAAA TATTTCATTG
     L  V  E   V  V  Q  S   Y  L  Q   D  K  K   Y  F  I  V
 851  TCTTGGATGA TGTATGGGAT AAAGATGCAT GGCTATTTCT AAACTATGCA
       L  D  D   V  W  D   K  D  A  W   L  F  L   N  Y  A
 901  TTGTCAGAA ACAATTGTGG AA     GCAAAGTG CTGA   TAACTA CTCGGAGAAA
     F  V  R  N   N  C  G   S  K  V   L  I  T  T   R  R  K
 951  GGA CGTATCT AGCTTGGCAG TTGATCAGTA TACAATTGAG CTTAAAACTC
       D  V  S   S  L  A  V   D  Q  Y   T  I  E   L  K  T  L
1001  TTCAATATGC TGAATCCTGG GAACTTTTCT        GTAAAAAGGC ATTTCGTACA
       Q  Y  A   E  S  W   E  L  F  C   K  K  A   F  R  T
1051  TCAAAGGATA ACCAATGTCC TGAGAACCTT AGGTTTTGTG CAGAGAAAAT
     S  K  D  N   Q  C  P   E  N  L   R  F  C  A   E  K  I
1101  TGTTGCTAGG TGTCAGGGAT TGCCCCTGAC TATTG        TAACC ATTGGAAGTG
       V  A  R   C  Q  G  L   P  L  T   I  V  T   I  G  S  V
1151  TTCTATCATA CCATGAATTC GAAGAGCAGG GATGGGAATC TTTCTACAGC
       L  S  Y   H  E  F   E  E  Q  G   W  E  S   F  Y  S
1201  CAACTTAGCT GGCAGTTAGC TAACAATCCG GAGCTGAATT         GGATATCTAA
     Q  L  S  W   Q  L  A   N  N  P   E  L  N  W   I  S  N
1251  TGTTCTGAAT ATGAGCTTGA ATGATCTCCC GAGTTATCTG AGGAACTGCT
       V  L  N   M  S  L  N   D  L  P   S  Y  L   R  N  C  F
1301  TTCTGTACTG CAGTCTTTAT CCTGAAGATT ACAAGATTAA AAGAAA          AGTG
       L  Y  C   S  L  Y   P  E  D  Y   K  I  K   R  K  V
1351  ATTTCCAAGC TATGGATAGC AGAAGGTTTA GTGGAAGATA GAGAAGATGG
     I  S  K  L   W  I  A   E  G  L   V  E  D  R   E  D  G
1401  AACAACAATG GAGGAGGTTG CCAATTATTA CCTTGTGGAG CTCACTCAGC
       T  T  M   E  E  V  A   N  Y  Y   L  V  E   L  T  Q  R
1451  GTTGTCTTCT TCGAGTCACA GAAAGTAATG CATGTGGAAG GCCGAGAGCT
       C  L  L   R  V  T   E  S  N  A   C  G  R   P  R  A
1501  TTTGTTATGC ATGATCTTGT GCGAGAGTTA ACCTCCAACA TTGCTAAAAA
     F   V  M  H   D  L  V   R  E  L   T  S  N  I   A  K  K
1551  GGAGAAGTTT GGTATTGCAT ATGGCGATGC TAGTACAACC CAAGTTCCCC
       E  K  F   G  I  A  Y   G  D  A   S  T  T   Q  V  P  P
1601  CTGAAGTTCG CCGCTTATGC ATACAAAGAG GTGCCCAAAC CTTGAATTCT
       E  V   R   R  L  C   I  Q  R  G   A  Q  T   L  N  S
1651  ATAGGTAGTT CGCGGTGTAA GTAG
     I  G  S  S   R  C  K   *
```

P-loop

GLPL

Zmnbslrr1 Realtime - F

Kinase-2

Zmnbslrr1 Realtime - R

Fig. 1. ORF of *Zmnbslrr1* and the deduced amino acid sequences from genotype CO387. The amino acid coding sequence was shown by the one-letter code. The positions of the primers (Zmnbslrr1-Realtime-F and Zmnbslrr1-Realtime-R) for real-time PCR were marked by black arrows. The alignment was performed using ClustalX (Thompson *et al*., 1997).

interrupted by eight introns evenly distributed within the gene. The ortholog in *Arabidopsis* AtGC1 (GenBank accession number AAM51559) was the most similar GC known to ZmGC1and 53% identical and 65% similar to ZmGC1. Deduced amino acid sequence of ZmGC1 was aligned with those of GCs that had been used to search common motifs (Lukiki and Gehring, 2003; Yuan *et al*., 2008). However, *Zmnbslrr1* was not assigned any *Fusarium* resistance in our mapping population.

Genetic mapping and disease resistance of the Zmnbslrr1 and Zmgc1

PIC11 marker was positioned on the linkage group 5 of developed previously for genetic map of the population and 9 cM and 16 cM from molecular markers umc1056 and BC399_1300 respectively based on RFLP data (Fig. 5). The SCAR (sequence characterized amplified region) marker (Fig. 2B) derived from total GenomeWalking sequence containing *Zmnbslrr1* gene sequence also

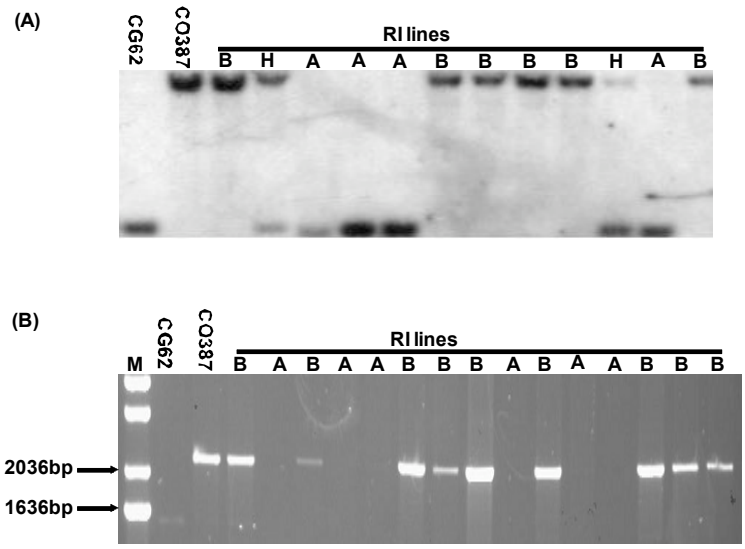

Fig. 2. Two molecular mapping approaches to position the *Zmnbslrr1* gene on the linkage map derived from F_5 RIs crossed from CG62 x CO387. **A** X-ray films exposed to membranes of the F5 population genomic DNA hybridized with a probe derived from sequence information of *Zmnbslrr1* gene. The probe was amplified using primers RFLP-PIC11-F 5′-CTAATAGATCAGAGAGCAAGCA-3′ and RFLP-PIC11-R 5′-GTTCCCAGGATTCAGCATATTG-3′ labeled with DIG method (Boehringer Mannheim, Germany). Recombinant inbred (RI) lines were digested with restriction enzyme *Eco*RV and one RFLP co-dominant marker was scored. A: genotype same as CG62, B: genotype same as CO387, H: heterozygous. **B** Sequence-characterized amplified region (SCAR) marker of PIC11. The fragments were amplified from parental DNA CO387 and CG62 and RI lines using primers (primer SCAR-PIC11-F 5′-ACTGGGCATGAAGGGTACTAG-3′ and SCAR-PIC11-R 5′- CTTAATCAGGTCCCTGGTTAGT-3′). The map position of the SCAR marker is the same as that of RFLP. A: genotype same as CG62, B: genotype same as CO387.

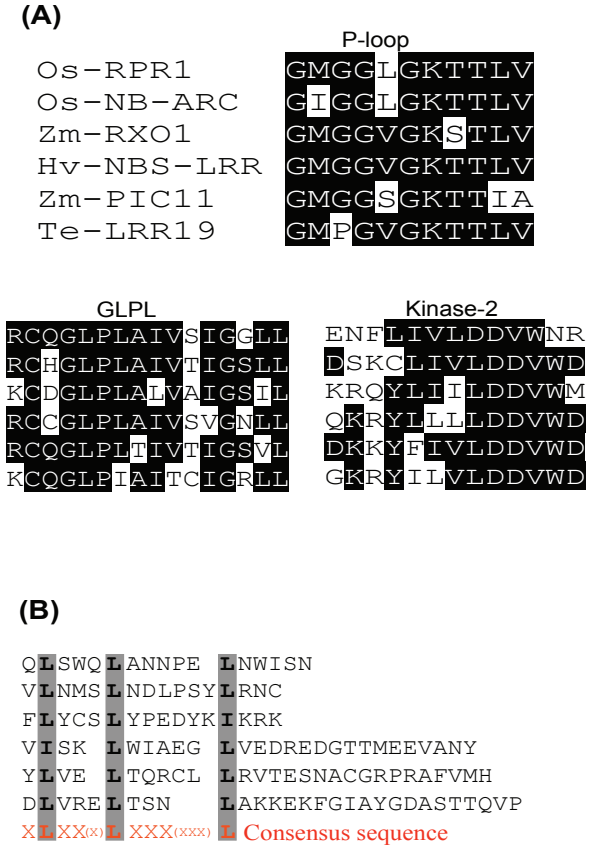

Fig. 3. Alignment of the deduced amino acid of ZmNBSLRR1 with other NBS-LRR genes. **A** Similarity between the ZmNBSLRR1 amino acid sequence and the products of NBS-LRRs resistance genes such as the rice RPR1 (BAA75812; Sakamoto *et al*., 1999), LRR19 (AAK20736; Feuillet *et al*., 2001), RXO1 (AAX31149; Zhao *et al*., 2005), OS-NB-ARC (ABA92222; Buell *et al*., 2005) and HV-NBS-LRR (CAD45036; Madsen *et al*., 2003). The ZmNBSLRR1 possesses an ATP/GTP-binding motif in the N-terminus that was composed of a P-loop domain, a kinase 2 domain, and followed by PLGL domain. **B** ZmNBSLRR1 showed obviously a reduced size domain in the C-terminus and it contained imperfect LRRs.

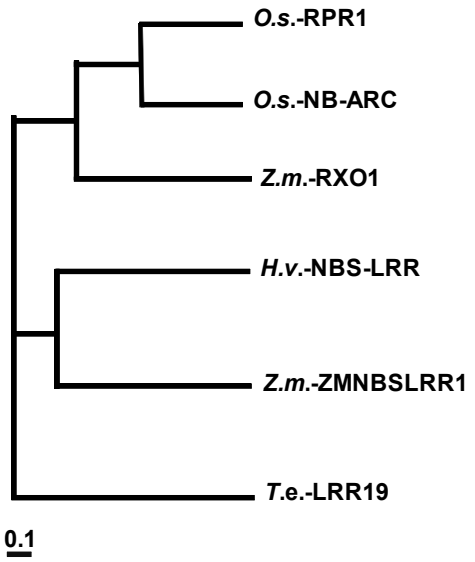

Fig. 4. Phylogenetic analysis of ZmNBSLRR1. Amino acid sequences of NBS-LRRs and putative amino acid sequence of ZmNBSLRR1 were aligned with the Clustal X program (Thompson *et al*., 1997). The scale bar represents an evolutionary distance of 0.1 amino acid substitution per residue.

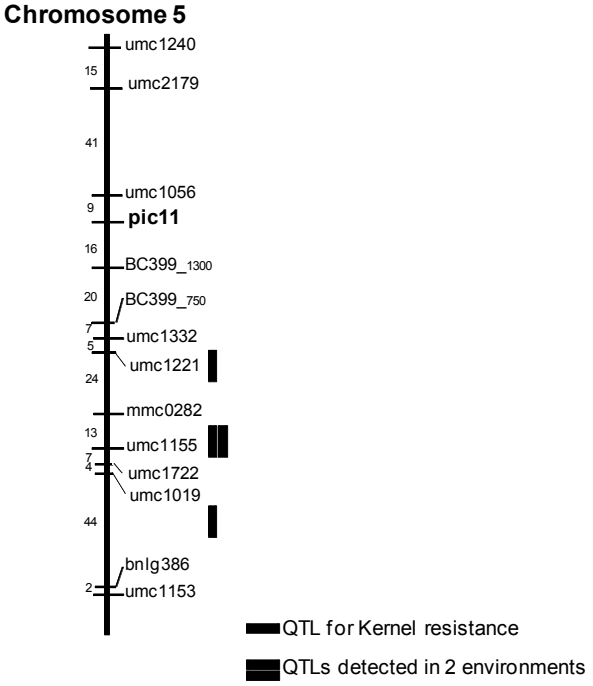

Fig. 5. Map position of the PIC11 on corn chromosomes. The genetic map was generated from segregation data of the CG62 x CO387 recombinant inbred lines using MAPMAKER/EXP 3.01b and QTL Cartographer 2.0. Relative positions of the markers were indicated in cM on the left of chromosomes and the markers were on the right of the chromosome. The extent of the QTL above a LOD threshold of 2.0 is indicated by the length of the bar. QTL detected in more than one environment are indicated by multiple bars.

confirmed the gene position on the genetic map. The mapping position matches that of others (Collins *et al*., 1998).

Six polymorphic markers derived from *Zmgc1* gene were identified in the membranes containing the individuals digested with restriction enzyme *Eco*RI (ER1_1 to ER1_5) and *Eco*RV (ER5_1). Two RFLP bands, ER1_1 and ER5_1, were significantly associated with gibberella ear rot resistance in maize across different environments in a recombinant inbred (RI) population (Yuan *et al*., 2008).

Zmnbslrr1 and Zmgc1 gene expression

In order to examine the function of *Zmnbslrr1* and *Zmgc1* gene in maize, the response of the transcript abundances to probenazole was measured. The pattern of mRNA expression of the *Zmgc1* gene showed clear differences compared to that of the *Zmnbslrr1* gene in corn seedling tissue after the probenazole treatment (Fig. 6).

Fig. 6 showed that the basal expression level of *Zmgc1* gene was low in untreated plants and the transcript abundance rapidly reached a peak within 2 h after pathogen challenge. In contrast, the reduction of *Zmnbslrr1* gene expression was observed at this early stage. Significantly increased *Zmgc1* transcript abundance (more than 10 folds) was detected 8 hours after treatment with probenazole. The transcription abundance remained higher throughout the time-course study. For six days after the probenazole applied, the abundance of the *Zmgc1* mRNA was still notably higher than that of basal level. However, transcript abundance of *Zmnbslrr1* in the seedling treated with probenazole was reduced substantially by PBZ treatment throughout the time course. The transcript abundance of *Zmnbslrr1* gene was notably lower than that of *Zmgc1* gene.

Discussion

RGAs can be cloned by PCR-based approaches and/or by using genomic information and then genetically mapped. Kojima *et al*., (2002) demonstrated a successful example using known gene sequences to isolate related genes, in which the QTL had been confirmed as candidate genes whose function was known from the researches of Arabidopsis. Collins *et al*., (1998) presented one of the molecular markers named PIC11 derived from a RGA. PIC11 RGA had been mapped to a locus that was a previously defined resistance locus. The locus was associated with Gibberella stalk rot that was caused by *Gibberella zeae* (petch), which is the sexual form of *F. graminearum* (Pe *et al*., 1993). If functionality of the *Zmnbslrr1* gene can be tested, then it will be easy to determine whether the candidate gene confers resistance when it is expressed as a transgene in a susceptible line. The putative amino acid sequence of ZmNBSLRR1 showed the similarity with NBS-LRR genes including RPR1 (BAA75812; Sakamoto *et al*., 1999), LRR19 (AAK20736; Feuillet *et al*., 2001), RXO1 (AAX31149; Zhao *et al*., 2005), OS-NB-ARC (ABA92222; Buell *et al*., 2005) and HV-NBS-LRR (CAD45036; Madsen *et al*., 2003). Sakamoto *et al*., (1999) demonstrated that the gene product, RPR1, contained motifs of a nucleotide binding site (NBS) and a leucine-rich repeats (LRR) domain and RPR1 gene expression was up-regulated by treated with probenazole, chemical inducers of systemic acquired

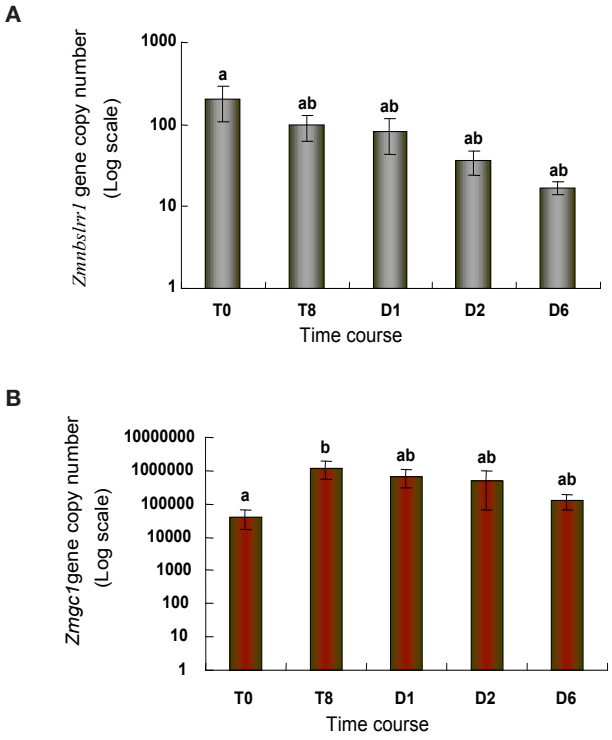

Fig. 6. Real-time PCR analysis for the *Zmnbslrr1* and *Zmgc1* gene transcript abundances in the leave tissue after probenazole treatment. The copy number of the transcript abundances was indicated at the Y axis and the time after probenazole treated was at the X axis. T: hour after the treatment; D: day after the treatment. Dark grey legends indicated the mean transcript abundance of *Zmnbslrr1*-CO387, whereas red legend showed the mean transcript abundance of *Zmgc1*-CO387. **A** The realtime PCR was amplified by primers (Zmnbslrr1-realtime-F 5′-AGCTAATAGATCAGAGAGCAAGCATGTCA-3′ and Zmnbslrr1-realtime-R 5′-TCCTTTCTCCGAGTAGTTATCAGCACTTTG-3′) was about 180 bp. **B** The realtime PCR was amplified by primers (Zmgc1-Realtime-F 5′-ACAACAGCACAACGATGAGCCTGACTAC-3′ and Zmgc1-Realtime-R 5′-CAATGAAGAGCTTGGACGAGGCCCGCAAAT-3′) was approximately 150 bp. Means labeled with the same letter were not significantly different (P<0.05).

resistance (SAR) such as BTH and SA, and pathogens. However, PIC11 was mapped to same locus as that of other's study but it was not assigned any resistance in our mapping population. Hulbert *et al*., (2001) suggested that resistance loci are often comprised of complex multicopy clusters of genes. The duplication events may play an important role in generating new resistance gene specificities in R-gene and RGA clusters. Duplicated RGA sequences result from transposition, unequal crossing-over, gene conversion, and point mutation in several crops (Meyers *et al*., 1998; Collins *et al*., 1999; Ellis *et al*., 1999). However, the reason for the reduced size of *Zmnbslrr1* gene is not known and only a single copy of *Zmnbslrr1* was identified. *Zmnbslrr1* might be a pseudogene due to the size of the gene but the detected transcript suggested that it was expressed.

Probenazole induces systemic acquired resistance (SAR)-like disease resistance in rice (*Oryza sativa*) has been widely used against rice blast disease for many years in Asia (Sakamoto *et al*., 1999). For plant sustainable disease management, chemical activated disease resistance may be an option for growers to protect their crops from plant diseases if the genetic resources could not provide sufficient resistance. It is necessary to understand about the various defense signal pathways in plants previous application of commercial chemical activators. The differential expression of *Zmnbslrr1* and *Zmgc1* gene before and after probenazole treated suggested that these genes might act different metabolic pathways corresponding to same signal. Induction of *Zmgc1* transcript was the response expected for a gene involved in partial resistance. Reduction in *Zmnbslrr1* transcript abundance may suggest that it is not involved in resistance to *F. graminearum*, but represents a competing pathway or contributes to susceptibility.

In plants, cGMP is involved in modulating gene expression of many defense and stress related pathways either functioning alone or combining with calcium (Bowler *et al*., 1994). Whether the guanylyl cyclase plays direct roles in perception of host stimuli or has roles in signal processing after probenazole remains to be determined. Gibberella ear rot infections usually occur when the cool weather precedes wet and warm condition during flowering. If the abiotic stress (cold) affects the abundance of cGMP and transcription of the GC gene(s) remains to be addressed. Enhancing activity of cell membrane GTPase, an enzyme involved in intracellular signal transduction pathway had been identified after the rice plant treated with probenazole (Kanoh *et al*., 1993). Although the relationship of probenazole induced resistance and SAR-like resistance induced by pathogen is still fragmentary, it suggested that the protective effects of the chemical mainly due to activation of host defense mechanism (Sakamoto *et al*., 1999). If there is any correlation between GTP metabolism and disease resistance or probenazole induction is still unknown. How the *Zmgc1* gene complement interacts with other genes is also not clear, but understanding these processes may lead to novel strategies to interfere in recognition host-pathogen.

Acknowledgments

This work was supported by the Ontario Corn Producers, the Ontario Corn Consortium (including the Ontario Pork Producers, Pioneer Hi-Bred, Syngenta Seeds Canada, Inc., Agrevo, King Agro, Pickseed Canada, W.G. Thompson, and Zeneca), the Ontario Ministry for Food and Agriculture, Ontario Research Enhancement Program, Canadapt, Federation des Producteurs de Cultures Commerciales du Quebec, the Natural Sciences and Engineering Research Council of Canada and Agriculture and Agri-Food Canada.

Angela Hill is gratefully acknowledged for assistance in preparing the manuscript.

References

Ali, L., Taylor, J., Liu, J., Sun, G., William, M., Kasha, K., Reid, L., and Pauls, P. (2005) Molecular mapping of QTLs for resistance to Gibberella ear rot in maize caused by *Fusarium graminearum*. Genome *48*, 521–533.

Belkhadir, Y., Subramaniam, R., and Dangl, L.J. (2004) Plant disease resistance protein signaling: NBS-LRR

proteins and their partners. Curr. Opin. in Plant Biol. *7*, 391–199.

Berridge, M.J. (1993) Cell signaling. A tale of two messengers. Nature *365*, 388–389.

Bowler, C., Neuhaus, G., Yamagata, H., and Chua, N.H. (1994) Cyclic GMP and calcium mediate phytochrome phototransduction. Cell *77*, 73–81.

Buell, C.R., Wing, R.A., McCombie, W.A., and Ouyang, S. (2005) The sequence of rice chromosomes 11 and 12, rich in disease resistance genes and recent gene duplications. BMC Biol *3*, 20–20.

Christensen, C.M., and Meronuck. R.A. (1986) Quality maintenance in stored grains and seeds. (Minneapolis, MN: University of Minneapolis Press).

Chungu, C., Mather, D.E., Reid, L.M., and Hamilton, R.I. (1996) Inheritance of kernel resistance to *Fusarium graminearum* in maize. J. Heredity *87*, 382–385.

Clay, K., and Kover, P.X. (1996) The Red Queen hypothesis and plant:pathogen interactions. Annu. Rev. Phytopathol. *34*, 29–50.

Collins, N., Webb, C., Seah, S., Ellis, J., Hulbert, S., and Pryor, A. (1998) The isolation and mapping of disease resistance gene analogs in maize. Mol. Plant Microbe Interact. *11*, 968–978.

Covert, S.F., Kapoor, P., Lee, M., Briley, A., and Nairn, C.J. (2001) Agrobacterium tumefaciens-mediated transformation of Fusarium circinatum. Mycol. Res. *105*, 259–264.

Dangl, J.L., and Jones, J.D. (2001) Plant pathogens and integrated defence responses to infection. Nature *411*, 826–833.

Davis, G., McMullen, M., Baysdorfer, C., Musket, T., Grant, D., Staebell, M.S., Xu, G., Polacco, M., Koster. L., Melia-Hancock, S., Houchins, K., Chao, S., and Coe, H.E. (1999) A maize map standard with sequenced core markers, grass genome reference points, and 932 ESTs in a 1736- locus map. Genetics *152*, 1137–1172.

Desjardins, A.E. (2003) Trichothecenes: from yellow rain to green wheat. ASM News *69*, 182–185.

Durner, J., Wendehenne, D., and Klessig, D. (1998) Defense gene induction in tobacco by nitric oxide, cyclic GMP, and cyclic ADP ribose. Proc. Natl. Acad. Sci. U.S.A. *95*, 10328–10333.

Ellis, J.G., Lawrence, G.J., Luck, J.E., and Dodds, P.N. (1999) The identification of regions in alleles of the flax rust resistance gene L that determine differences in gene-for-gene specificity. Plant Cell *11*, 495–506.

Feuillet, C., Penger, A., Gellner, K., Mast, A., and Keller, B. (2001) Molecular evolution of receptor-like kinase genes in hexaploid wheat. Independent evolution of orthologs after polyploidization and mechanisms of local rearrangements at paralogous loci. Plant Physiol. *125*, 1304–1313.

Grant, M.R., Godiard, L., Straube, E., Ashfield, T., Lewald, J., Sattler, A., Innes, R.W., and Dangl, J.L. (1995) Structure of the Arabidopsis RPM1 gene enabling dual specificity disease resistance. Science *269*, 843–846.

Greenhalgh, R., Neish, G.A., and Miller, J.D. (1983) Deoxynivalenol, acetyl deoxynivalenol, and zearalenone formation by Canadian isolate of *Fusarium graminearum* on solid substrates. Appl. Environ. Microbiol. *46*, 625–629.

Hoisingtonm, D.A., Khairallah, M.M., and Gonzales-de-Leon, D. (1994) Laboratory protocols. CIMMYT Applied Molecular Genetics Laboratory. (Hisfoa, Mexico: CIMMYT)

Hulbert, S.H., Webb, C.A., Smith, S.M., and Sun, Q. (2001) Resistance gene complexes: Evolution and utilization. Annu. Rev. Phytopathol. *39*, 285–312.

Iqbal, M.J., Yaegashi, S., Ahsan, R., Shopinski, K.L., and Lightfoot, D.A. (2005) Root response to *Fusarium solani* f. sp . glycines: temporal accumulation of transcripts in partially resistant and susceptible soybean. Theor. Appl. Genet. *110*, 1429–1438.

Kanoh, H., Haga, M., Iwata, M., and Sekizawa, Y. (1993) Transmembrane signaling operated at rice blade cells stimulated by blast fungus elicitor I: Operation of the phosopholipase C system. Journal of Pesticide Science *18*, 299–308.

Kojima, S., Takahashi, Y., Kobayashi, Y., Monna, L., Sasaki, T., Araki, T., and Yano, M. (2002) Hd3a, a rice ortholog of the Arabidopsis FT gene, promotes transition to flowering downstream of Hd1 under short-day condition. Plant Cell Physiol. *43*, 1096–1105.

Kosambi, D.D. (1944) The estimation of map distance from recombination values. Ann. Eugen. *12*, 172–175.

Lander, E.S., Green, P., Abrahamson, J., Barlow, A., Daly, M.J., Lincoln, S.E., and Newburg, L. (1987) MAPMAKER: an interactive computer package for constructing primary genetic linkage maps of experimental and natural populations. Genomics *1*, 174–181.

Langcake, P., Kuhn, P.J., and Wade, M. (1983) The mode of action of systemic fungicides. In: Hutson, D.H., Roberts, T.R. ed. (Progress in pesticide biochemistry and toxicology. Chichester, John Wiley) pp. 1–109.

Levine, A., Pennell, R.I., Alvarez, M.E., Palmer, R., and Lamb, C. (1996) Calcium-mediated apoptosis in a plant hypersensitive disease resistance response. Curr. Biol. *6*, 427–437.

Lee, E.A., Good, B., Chakravarty, R., and Kannenberg, L. (2001) Corn inbred lines CG60 and CG62. Can. J. Plant Sci. *81*: 453–454.

Ludidi, N., and Gehring, C. (2003) Identification of a novel protein with guanylyl cyclase activity in *Arabidopsis thaliana*. J. Biol. Chem. *278*, 6490–6494.

Madsen, L.H., Collins, N.C., Rakwalska, M., Backes, G., Sandal, N., Krusell, L., Jensen, J., Waterman, E.H., Jahoor, A., Ayliffe, M., Pryor, A.J., Langridge, P., Schulze-Lefert, P., and Stougaard, J. (2003) Barley disease resistance gene analogs of the NBSLRR class: identification and mapping. Mol. Gen. Genomics *269*, 150–161.

Meyers, B.C., Shen, K.A., Rohani, P., Gaut, B.S., and Michelmore, R.W. (1998) Receptor-like genes in the major resistance locus of lettuce are subject to divergent selection. Plant Cell *11*, 1833–1846.

Meyers, B.C., Kozik, K., Griego, A., Kuang, H., and Michelmore, R.W. (2003) Genome–wide analysis of NBS-LRR encoding genes in Aarbidopsis. Plant Cell *4*, 809–834.

Michelmore, R. (2000) Genomic approaches to plant disease resistance. Curr. Opin. Plant Biol. *3*, 125–131.

Molto, G.A., Gonzalez, H. H.L., Resnik, S.L., and Gonzalez, A.P. (1997) Production of trichothecenes and zearalenone by isolates of Fusarium ssp. from Argentinean maize. Food Addit. Contam. *14*, 263–268.

Oostendorp, M., Kunz, W., Dietrich, B., and Staub, T. (2001) Induced resistance in plants by chemicals. Euro. J. Plant Pathol. *107*, 19–28.

Pe, M.E., Gianfranceschi, L., Taramino, G., Tarchini, R., Angelini, P., Dani, M., and Binelli, G. (1993) Mapping quantitative trait loci (QTLs) for resistance to *Gibberella zeae* infection in maize. Mol. Gen. Genet. *241*, 11–16.

Pink, D.A.C. (2002) Strategies using genes for non-durable resistance. Euphytica *1*, 227–236.

Reid, L.M., Mather, D.E., Bolton, A.T., and Hamilton, R.I. (1994) Evidence for a gene for silk resistance to *Fusarium graminearum* Schw. ear rot of maize. J. Hered. *85*, 118–121.

Reid, L.M., and Hamilton, R.I. (1996) Effect of inoculation position, timing, macroconidial concentration, and irrigation of resistance of corn to *Fusarium graminaerum* infection through kernels. Can. J. Plant Pathol. *18*, 279 – 285.

Rossi, M., Goggin, F.L., Milligan, S.B., Kaloshian, I., Ullman, D.E., and Williamson, V. M. (1998) The nematode resistance gene Mi of tomato confers resistance against the potato aphid. Proc. Natl. Acad. Sci. U.S.A. *95*, 9750–9754.

Ryals, J.A., Neuenschwander, U.H., Willits, M. G, Molina, A., Steiner, H., and Hunt, D.M. (1996) Systemic acquired resistance. Plant Cell *8*, 1809–1819.

Sakamoto, K., Tada, Y., Yokozeki, Y., Akagi, H., Hayashi, N., Fujimura, T., and Ichikawa, N. (1999) Chemical induction of disease resistance in rice is correlated with the expression of a gene encoding a nucleotide binding site and a leucine-rich repeat. Plant Mol. Biol. *40*, 847–855.

Smale, S.T. (1997) Transcription initiation from TATA-less promoters within eukaryotic protein-coding genes. Biochem. Biophys. Acta *1351*, 73–88.

Saraste, M., Sibbald, P,R,, and Wittinghofer, A. (1990) The P-loop--a common motif in ATP- and GTP-binding proteins. Trends Biochem. Sci. *15*: 430–4.

Sutton, J.C. (1982) Epidemiology of wheat head blight and maize ear rot caused by *Fusarium graminearum*. Can. J. Plant Pathol. *4*, 195 – 209.

Thompson, J.D., Higgins, D.G., and Gibson, T.J. (1994) CLUSTAL W: improving the sensitivity of progressive multiple sequence alignment through sequence weighting, position-specific gap penalties and weight matrix choice. Nucleic Acids Res. *22*, 4673–4680.

Thompson, J.D., Gibson, T.J., Plewiak, F., Jeanmougin, F., and Higgins, D.G. (1997) The CLUSTAL_X windows interface: flexible strategies for multiple sequence alignment aided by quality analysis tools. Nucleic Acids Res. *24*, 4876–4882.

Traut, T.W. (1994) The functions and consensus motifs of nine types of peptide segments that form different types of nucleotide-binding sites. Eur. J. Biochem. *222*, 9–19.

Uchiyama, M., Abe, H., Sato, R., Shimura, M., and Watanabe, T. (1973) Fate of 3-allyloxy-1,2-benzisothiazole 1,1-dioxide (Oryzemater) in rice plants. Agricultural and Biological Chemistry. *37*, 737–745.

Wang, S., Basten, C.J., and Zeng, Z.B. (2006) Windows QTL Cartographer 2.5. (Raleigh, NC.)

Watanabe, T., Sekizawa, Y., Shimura, M., Suzuki, Y., Matsumoto, K., Iwata, M., and Mase, S. (1979) Effects of probenazole (Oryzemate®) on rice plants with reference to controlling rice blast. Journal of Pesticide Science *4*, 53–59.

Whitham, S., Dinesh-Kumar, S.P., Choi, D., Hehl, R., Corr, C., and Baker, B. (1994) The product of the tobacco mosaic virus resistance gene N: Similarity to toll and the interleukin-1 receptor. Cell *78*, 1101–1115.

Yuan, J., Ali, L., Taylor, J., Liu, J., Sun, S., Liu, W., Masilimany, P., Gulati-Sakhuja, A., and Pauls, K.P. (2008) A guanylyl cyclase-like gene is associated with Gibberella ear rot resistance in maize (Zea mays L.) Theor. Appl. Genet. *116*, 465–479.

Zhao, B., Lin, X., Poland, J., Trick, H., Leach, J., and Hulbert. S. (2005) A maize resistance gene functions against bacterial streak disease in rice. Proc. Natl. Acad. Sci. U.S.A. *102*, 15383–15388.

New Books

Caliciviruses
Molecular and Cellular Virology
Edited by: **G.S. Hansman, J. Jiang, K.Y. Green**
c. 250 pp., April 2010
ISBN: 978-1-904455-63-9 $310 / £159
The most important research findings. Timely and comprehensive reviews. Discussion of past and current research.

Epstein-Barr Virus
Latency and Transformation
Edited by: **Erle S. Robertson**
c. 220 pp., April 2010
ISBN: 978-1-904455-62-2 $310 / £159
Expert virologists comprehensively review this important subject from a genetic, biochemical, immunological, and cell biological perspective. Essential reading.

Anaerobic Parasitic Protozoa
Genomics and Molecular Biology
Edited by: **C.G. Clark, P.J. Johnson, R.D. Adam**
c. 210 pp., March 2010
ISBN: 978-1-904455-61-5 $310 / £159
Internationally acclaimed researchers critically review the most important aspects of research on anaerobic parasitic protozoa.

Lentiviruses and Macrophages
Molecular and Cellular Interactions
Edited by: **Moira Desport**
c. 410 pp., March 2010
ISBN: 978-1-904455-60-8 $310 / £159
Top lentivirus and macrophage specialists comprehensively review cutting-edge topics in the molecular and cellular biology of the lentivirus-macrophage interaction.

Microbial Population Genetics
Edited by: **Jianping Xu**
c. 230 pp., March 2010
ISBN: 978-1-904455-59-2 $310 / £159
Details the major current advances in microbial population genetics and genomics.

Borrelia
Molecular Biology, Host Interaction and Pathogenesis
Edited by: **D. Scott Samuels and Justin D. Radolf**
c. 630 pp., March 2010
ISBN: 978-1-904455-58-5 $310 / £159
Written by renowned scientists in the field who have made seminal contributions to the field, this book is a comprehensive guide to the pathogenic *Borrelia*.

Influenza
Molecular Virology
Edited by: **Qinghua Wang and Yizhi Jane Tao**
c. 200 pp., February 2010
ISBN: 978-1-904455-57-8 $310 / £159
NS1, hemagglutinin, nucleoprotein, glycoproteins, M2 channel, virulence, polymerase, microarrays, vaccine design.

RNA Interference and Viruses
Current Innovations and Future Trends
Edited by: **Miguel Angel Martínez**
c. 280 pp., February 2010
ISBN: 978-1-904455-56-1 $310 / £159
Expert RNAi specialists from around the world have teamed up to produce a timely and thought-provoking review of the area.

Retroviruses
Molecular Biology, Genomics and Pathogenesis
Edited by: **Reinhard Kurth and Norbert Bannert**
c. 520 pp., January 2010
ISBN: 978-1-904455-55-4 $310 / £159
Genomics, molecular biology and pathogenesis , comprehensively covering all the recent advances.

Metagenomics
Theory, Methods and Applications
Edited by: **Diana Marco**
x + 212 pp., January 2010
ISBN: 978-1-904455-54-7 $310 / £159
Essential reading for all researchers performing metagenomics studies. Highly recommended.

Aspergillus
Molecular Biology and Genomics
Edited by: **M. Machida and K. Gomi**
x + 238 pp., January 2010
ISBN: 978-1-904455-53-0 $310 / £159
Systematics, bioinformatics, systems biology, regulation, genetics, genomics, metabolism, ecology, development.

Environmental Molecular Microbiology
Edited by: **Wen-Tso Liu and Janet K. Jansson**
viii + 232 pp., January 2010
ISBN: 978-1-904455-52-3 $310 / £159
Current technology and applications. Microbial diversity, phylogeny, communities, 16S rRNA, metagenomics, metaproteomics, microarrays, fingerprinting, soil, water, plants, humans, biofilms.

Neisseria
Molecular Mechanisms of Pathogenesis
Edited by: **Caroline Genco and Lee Wetzler**
x + 270 pp., January 2010
ISBN: 978-1-904455-51-6 $310 / £150
Genomics, biofilms, adhesion, invasion, immunity, complement, apoptosis, vaccine, epidemiology, antibiotic resistance.

Frontiers in Dengue Virus Research
Edited by: **K.A. Hanley and S.C. Weaver**
viii + 304 pp., January 2010
ISBN: 978-1-904455-50-9 $310 / £150
Evolution, epidemiology, translation, replication, pathogenesis, host, animal models, mosquito interactions, transmission, vaccine, drugs, immunotherapy.

ABC Transporters in Microorganisms
Edited by: **Alicia Ponte-Sucre**
xii + 260 pp., August 2009
ISBN: 978-1-904455-49-3 $310 / £150

Pili and Flagella
Current Research and Future Trends
Edited by: **Ken Jarrell**
x + 238 pp., August 2009
ISBN: 978-1-904455-48-6 $310 / £150

Lab-on-a-Chip Technology
Edited by: **K. E. Herold and A. Rasooly**
Vol 1: Fabrication and Microfluidics
ISBN: 978-1-904455-46-2 $310 / £150
Vol 2: Biomolecular Separation and Analysis
ISBN: 978-1-904455-47-9 $310 / £150

Bacterial Polysaccharides
Current Research and Future Trends
Edited by: **Matthias Ullrich**
xii + 358 pp., June 2009
ISBN: 978-1-904455-45-5 $310 / £150

Microbial Toxins:
Current Research and Future Trends
Edited by: **Thomas Proft**
viii + 192 pp., May 2009
ISBN: 978-1-904455-44-8 $310 / £150

Acanthamoeba:
Biology and Pathogenesis
Author: **Naveed Khan**
viii + 290 pp., February 2009
ISBN: 978-1-904455-43-1 $310 / £150

Bacterial Secreted Proteins:
Secretory Mechanisms and Role in Pathogenesis
Edited by: **Karl Wooldridge**
xii + 512 pp., April 2009
ISBN: 978-1-904455-42-4 $310 / £150