Southern Illinois University Carbondale
OpenSIUC

Conference Proceedings

Department of Electrical and Computer Engineering

6-1-2007

Modified Aperture Coupling Annular-Ring Antenna fed by Stripline

Seung Hoon Baek
Southern Illinois University Carbondale

Byungje Lee
Kwangwoon University

Frances J. Harackiewicz
Southern Illinois University Carbondale, fran@engr.siu.edu

Follow this and additional works at: http://opensiuc.lib.siu.edu/ece_confs
Published in Baek, S. H., Lee, B., & Harackiewicz, F. J. (2007). Modified aperture coupling annular-ring antenna fed by stripline. *Antennas and Propagation International Symposium, 2007 IEEE*, 3680 - 3683. doi: 10.1109/APS.2007.4396337 ©2007 IEEE. Personal use of this material is permitted. However, permission to reprint/republish this material for advertising or promotional purposes or for creating new collective works for resale or redistribution to servers or lists, or to reuse any copyrighted component of this work in other works must be obtained from the IEEE. This material is presented to ensure timely dissemination of scholarly and technical work. Copyright and all rights therein are retained by authors or by other copyright holders. All persons copying this information are expected to adhere to the terms and constraints invoked by each author's copyright. In most cases, these works may not be reposted without the explicit permission of the copyright holder.

Recommended Citation
Baek, Seung Hoon; Lee, Byungje; and Harackiewicz, Frances J., "Modified Aperture Coupling Annular-Ring Antenna fed by Stripline" (2007). *Conference Proceedings*. Paper 8.
http://opensiuc.lib.siu.edu/ece_confs/8

This Article is brought to you for free and open access by the Department of Electrical and Computer Engineering at OpenSIUC. It has been accepted for inclusion in Conference Proceedings by an authorized administrator of OpenSIUC. For more information, please contact jnabe@lib.siu.edu.

Modified aperture coupling annular-ring antenna fed by stripline

Seung Hoon Baek[1]*, Byungje Lee[2], and Frances J. Harackiewicz[1]
[1] Department of Electrical and Computer Engineering
Southern Illinois University Carbondale Carbondale, IL 62901
Tel: 618-453-3034, E-mail:baek@engr.siu.edu
[2]Dept. of Wireless Communications Engineering, Kwangwoon University,
447-1, Wolgye-Dong, Nowon-Gu, Seoul, Korea 139-701

1. Introduction

The most common disadvantage seen among microstip antenna characteristics is a narrow bandwidth. To meet market needs for wireless communication applications, development of broadband multi-band antennas are demanded to develop. Many researchers have enhanced the bandwidth of microstrip antenna. Well-known bandwidth increasing techniques are stacking resonators, using parasitic elements, modifying ground plane, making slot antenna, and using aperture-coupling feed.

Various types of feed structures for microstrip antennas are compared in [1]. Broad bandwidth is obtained using aperture coupling with impedance matching. One of advantages in aperture coupling is polarization purity. A proximity coupled patch antenna for 2.4GHz Industrial Scientific and Medical (ISM) band was presented in [2]. Unlike the aperture feed structure, a simple ground plane as part of proximity feed structure removes back scattered radiation. A modified aperture coupling annular-ring antenna fed by microstrip is presented in this paper. This antenna structure can be considered as the combination of aperture feeding and proximity feeding an annular-ring antenna in Fig. 1. It has both advantages in the polarization purity and in reduction of back radiation. From the structure based on the proximity feed annular-ring antenna, an aperture layer is inserted and modified as well as an aperture size to enhance bandwidth

2. Antenna configuration

Single and stacked annular-ring microstrip antennas using proximity feed were studied at 2.4GHz [3]. In [3], the bandwidth of a proximity feed annular–ring antenna is changed due to location of feedline under the ring. The main experimental concept of testing the annular-ring antenna is moving the feedline substrate under the ring patch substrate from the outer toward the inside through the other side by 1mm in Fig. 2. W_f= 2.39mm, L_f= 62.5mm, W = 9.43mm. There are three ranges where S_{11} is below -10dB in Fig. 2. From Fig. 2 the first and second acceptable S_{11} ranges are for distances of feedline point from center those are considered to be the best possible aperture locations for coupling electromagnetic fields to the radiating patch because impedance variation dominates the bandwidth of an annular-ring antenna.

1-4244-0878-4/07/$20.00 ©2007 IEEE

Authorized licensed use limited to: Southern Illinois University Carbondale. Downloaded on March 4, 2009 at 15:43 from IEEE Xplore. Restrictions apply.

The presently proposed antenna consists of four layers with three substrates. A radiating element, modified aperture, feedline, and ground are in the order from top to bottom layer.

Compared to standard rectangular and circular antennas, an interesting characteristic of ring microstrip antennas is the ability to obtain many different sized antennas at the same resonant frequency by controlling the ratio of outer and inner radius. Ratio 2, R = b/a, is used. This antenna was simulated and fabricated on the Rogers RT /Duroid 5880 substrate with the thickness of 0.787mm and the dielectric constant (ε_r) of 2.2. The size of the ground plane is 60 x 60 mm^2. The dimensions of the outer and inner annular rings are 18.86mm and 9.43mm for 2.4GHz resonant frequency, respectively.

3. Results

The maximum bandwidths of the proximity feed annular-ring antenna are 15MHz in simulation and 22MHz in measurement, at -15mm and 3mm feed points from the center and at -14mm and 0mm feed points from the center, respectively. When a substrate without aperture layer was inserted, the bandwidth was naturally increased because antenna volume was increased. But, the capacitance value was decreased since the same feedline width was used although the distance between the feedline and the radiating element was increased. When compensating the feedline width, the maximum bandwidth is 43MHz in simulation at 2.54GHz.

To maximize coupling two possible locations which may have bandwidth was considered. An aperture which size of 5mm x 30mm was inserted on the aperture layer (24mm x 60mm). The feedline with which dimension is 2.4mm x 30mm is located to between -30mm and 0mm in Fig. 3(a). The maximum simulation bandwidth are 174MHz at f_c = 2.68GHz with S_{11}= -31.73dB in Fig. 4. Compared to the proximity feed annular-ring antenna the bandwidth was increased to 4 times wider.

A second aperture was inserted and modified on the aperture layer (30mm x 60mm) in Fig. 3(b). The maximum simulation bandwidth are 260MHz at f_c = 2.66GHz with S_{11}= -25 in Fig. 4.

4. Conclusion

The results of simulation and measurement of modified aperture coupling annular-ring antenna fed by stripline were reported. The bandwidth of the proposed antenna is increased due to insertion of aperture and modification of aperture layer. Measurement results are processing In Fig. 5 and will be presented at 2007 AP-symposium.

Reference

[1] P. Bhartia, Inder Bahl, R. Garg, and A. Ittipiboon, *Microstrip Antenna Design Handbook*, Artech House Inc., MA, 2001.

Authorized licensed use limited to: Southern Illinois University Carbondale. Downloaded on March 4, 2009 at 15:43 from IEEE Xplore. Restrictions apply.

[2] K. Hettak and G. Y. Delisle, "Low profile cellular radio antenna for ISM applications," *Antennas and Propagation Society, 2003 IEEE International Symposium*, Vol. 1, 2003 pp 443-446.
[3] S-H. Baek, *Proximity Fed Stack of Two Annular-ring Antenna Elements*, Master Thesis, Dept. of Electrical and Computer Engineering, Southern Illinois University Carbondale, Dec. 2003.

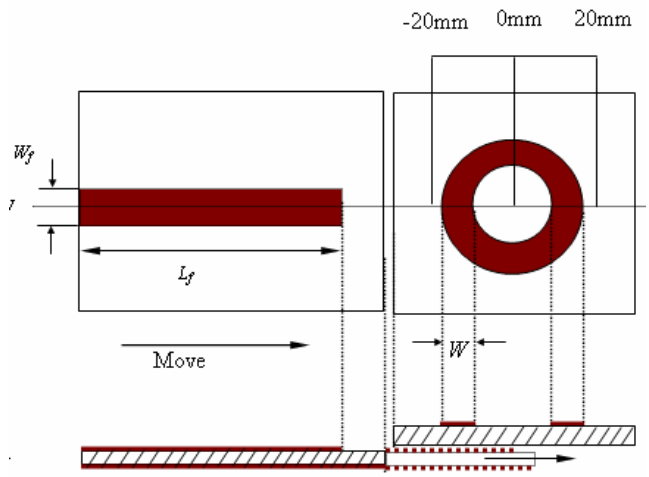

Fig.1. Configuration of proximity feed annular-ring antenna.

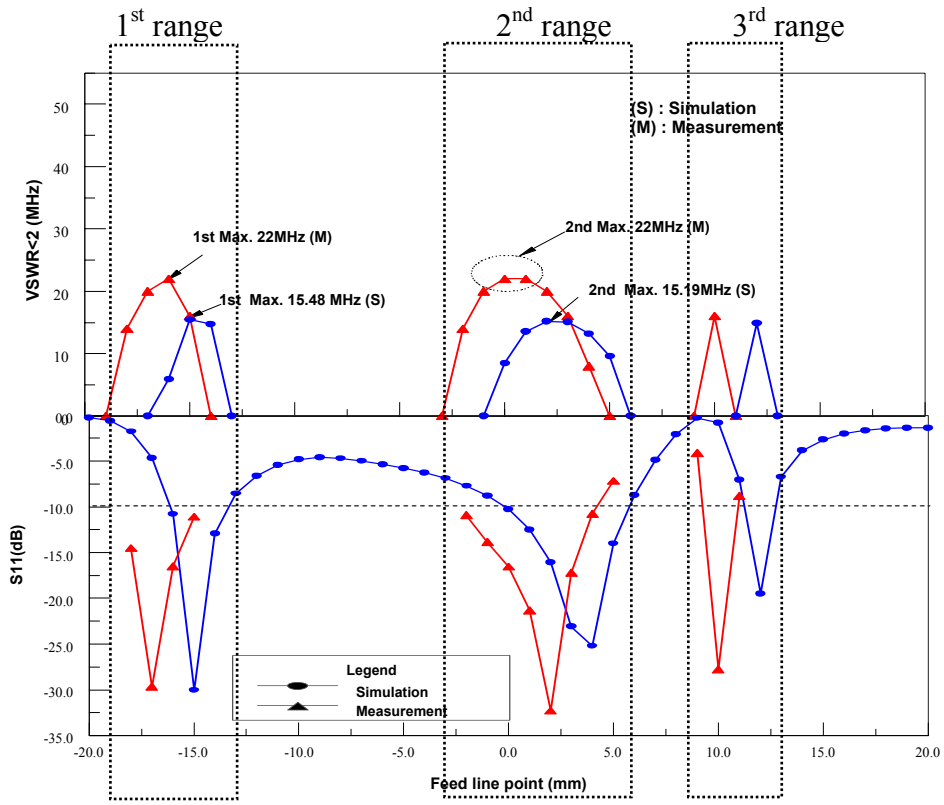

Fig.2. The plot of the simulation and measurement of proximity annular-ring antenna for the bandwidth (MHz) and S11 (dB) when R = 2.

Authorized licensed use limited to: Southern Illinois University Carbondale. Downloaded on March 4, 2009 at 15:43 from IEEE Xplore. Restrictions apply.

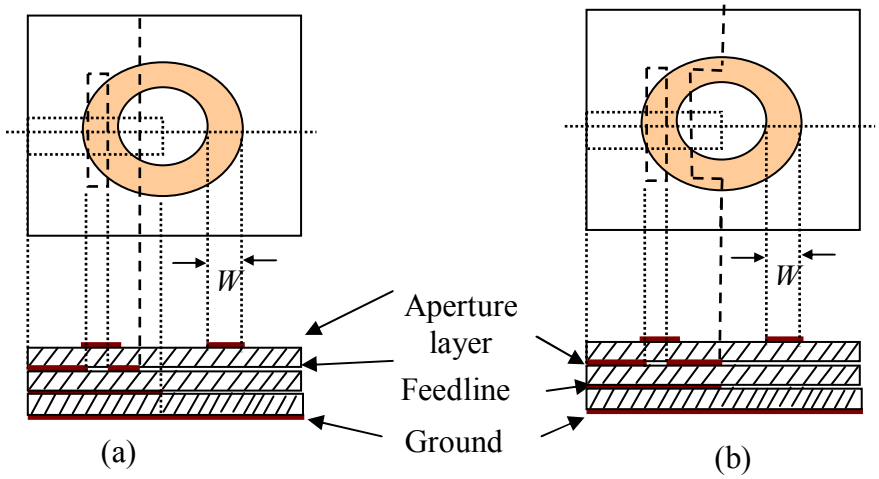

Fig.3. Configuration of modified aperture coupling annular-ring antenna. (a) with an aperture (proposed antenna 1), (b) an aperture and modified aperture ground (proposed antenna 2).

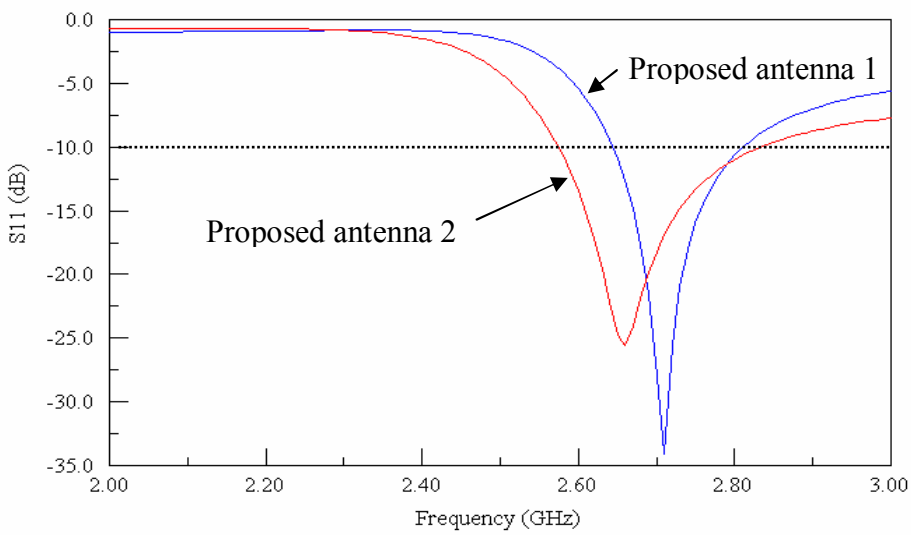

Fig.4. Simulated S_{11} of modified aperture coupling annular-ring antenna one aperture and an aperture and modified aperture ground

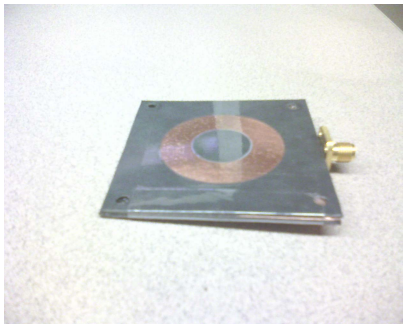

Fig.5. Actual photo. Measurement is on processing.

Authorized licensed use limited to: Southern Illinois University Carbondale. Downloaded on March 4, 2009 at 15:43 from IEEE Xplore. Restrictions apply.