Southern Illinois University Carbondale
OpenSIUC

Publications | Department of Plant Biology

2007

Phylogenetic relationships and ecological speciation in the mistletoe Tristerix (Loranthaceae): the influence of pollinators, dispersers, and hosts

Amico C. Guillermo

Romina Vidal-Russel

Daniel L. Nickrent
Southern Illinois University Carbondale, nickrent@plant.siu.edu

Follow this and additional works at: http://opensiuc.lib.siu.edu/pb_pubs
Published in American Journal of Botany 94: 558-567. http://www.amjbot.org/cgi/content/abstract/94/4/558

Recommended Citation
Guillermo, Amico C.; Vidal-Russel, Romina; and Nickrent, Daniel L., "Phylogenetic relationships and ecological speciation in the mistletoe Tristerix (Loranthaceae): the influence of pollinators, dispersers, and hosts" (2007). *Publications.* Paper 2.
http://opensiuc.lib.siu.edu/pb_pubs/2

This Article is brought to you for free and open access by the Department of Plant Biology at OpenSIUC. It has been accepted for inclusion in Publications by an authorized administrator of OpenSIUC. For more information, please contact opensiuc@lib.siu.edu.

American Journal of Botany 94(4): 558–567. 2007.

Phylogenetic relationships and ecological speciation in the mistletoe *Tristerix* (Loranthaceae): the influence of pollinators, dispersers, and hosts[1]

Guillermo C. Amico,[2,3,4] Romina Vidal-Russell,[3] and Daniel L. Nickrent[3]

[2]Laboratorio Ecotono, Universidad Nacional del Comahue, CRUB, Quintral 1250 Bariloche, RN 8400 Argentina; and
[3]Department of Plant Biology, Southern Illinois University, Carbondale, Illinois 62901-6509 USA

Phylogenies can provide valuable information on biotic and abiotic factors associated with speciation. We examined species relationships in *Tristerix* (Loranthaceae), a genus of 11 species with an Andean distribution from Colombia to Chile. A previous classification divided *Tristerix* into subgenera *Tristerix* (two species) and *Metastachys* (nine species). We tested this classification by generating a molecular phylogeny of the genus using nuclear ribosomal DNA ITS and chloroplast *atpB-rbcL* intergenic spacer and *trnL-F* regions. All partitions generally gave congruent trees, thus a combined analysis was conducted. *Tristerix* was composed of a northern clade (six species) and a southern clade (four species). *Tristerix verticillatus* and *T. penduliflorus* (*Metastachys*) were strongly supported as members of the (southern) subgenus *Tristerix* clade. Speciation appears to be correlated with the emergence of matorral and cloud forest biomes and is driven by interactions with pollinators and seed dispersers. *Tristerix aphyllus* is sister to *T. corymbosus* of the matorral, not to neighboring temperate forest populations, thus rendering the latter species paraphyletic. This ecological speciation event may have occurred in sympatry. *Tristerix* provides excellent examples of how, during the orography of the Andes, many dynamic and interacting ecological factors have influenced their speciation.

Key words: *atpB-rbcL*; chloroplast DNA; Loranthaceae; paraphyletic species; ribosomal DNA; South America; sympatric speciation; *trnL-F* region.

Advances in phylogenetic methods have led to rapid progress in addressing plant speciation such that students of this topic are no longer "evolutionary biologists' poor cousins, doomed to eternal speculation about untestable theories" (Rieseberg and Wendel, 2004, p.3). Even if there is general acceptance that species are biologically real entities (Rieseberg et al., 2006), the mode in which speciation takes place remains controversial and poorly understood (Kirkpatrick and Ravigné, 2002). Mechanistic classifications of speciation modes include polyploidy, genetic drift, divergence under uniform selection, and ecological speciation (Schluter, 2005). The latter process, in which divergent selection acts on traits that represent adaptations to contrasting environments, can occur in allopatry or sympatry. Convincing evidence of sympatric speciation in plants was recently reported for oceanic palms (Savolainen et al., 2006), but questions remain as to whether or not this is an isolated example with little relevance to diversification of continental floras (Jiggins, 2006). Even in phytophagous insects, which represent the best cases of sympatric speciation in animals, discounting allopatric speciation is challenging (Berlocher and Feder, 2002).

The botanical equivalent of phytophagous insects are parasitic plants (Pennings and Callaway, 2002), particularly mistletoes that occur on aerial portions of woody hosts. Thus, mistletoes represent good candidates to further study modes of speciation. Although all mistletoes are found in the order Santalales (families Loranthaceae, Misodendraceae, Santalaceae, and Viscaceae), the term refers to a habit, not to a specific taxonomic group. Mistletoes experience particularly constrained life histories because of associations with other organisms in their environment (Watson, 2001; Aukema, 2003). Specifically, all mistletoes are primarily dependent upon their host plant, thus their distributions obligatorily track those of their hosts (Norton and Carpenter, 1998). Moreover, many loranthaceous mistletoes are highly adapted to either insect or bird pollination, and most are dispersed by animals, primarily birds (Amico and Aizen, 2000; Watson, 2001; Restrepo et al., 2002). These close coevolutionary relationships with animals have resulted in numerous modifications of mistletoe flower and fruit features (Kuijt, 1969; Reid, 1991).

The largest mistletoe family is Loranthaceae (73 genera, ca. 900 species), which includes root and stem parasitic plants. Root parasitism is found in three genera: *Nuytsia* of western Australia, *Atkinsonia* of eastern Australia, and *Gaiadendron* of the neotropics. Loranthaceae have reached their greatest degree of differentiation in the southern hemisphere and have long been considered a family of Gondwanan origin. Of the 16 loranth genera found in South America, *Gaiadendron*, *Desmaria*, *Ligaria*, *Notanthera*, and *Tristerix* are considered relictual based on their base chromosome numbers, low numbers of species, and restricted distributions (Barlow, 1983). According to the most recent taxonomic monograph of the genus (Kuijt, 1988), *Tristerix* consists of 11 species endemic to the Andes of South America. Distributions range from subparamo elevations in north-central Colombia to low

[1] Manuscript received 7 April 2006; revision accepted 21 February 2007.

The authors thank M. Aizen, W. Gonzáles, M. Rodríguez Cabal, G. Servat, L. Suarez, and N. Tercero for help in the field obtaining specimens for this project; the two anonymous reviewers for making valuable comments on an earlier version of the manuscript; the Corporación Nacional Forestal (Chile) and Llao Llao Municipal Park (Argentina) for granting permits to collect these mistletoes; and S. Sipes for generously allowing use of her automated DNA sequencer. Funds for field work in Peru were provided by the Organization for Tropical Studies (OTS). The following herbaria permitted access to specimens for observation: CONC, CUZ, SI, USL, USM. Herbarium specimens used for molecular work were obtained from MO. Financial support was provided by a Ph.D. fellowship from Consejo Nacional de Investigacion Científicas y Técnicas (CONICET) and grants from the National Geographic Society (7365–02) and the National Science Foundation (to D.L.N.).

[4]Author for correspondence (e-mail: gamico@crub.uncoma.edu.ar)

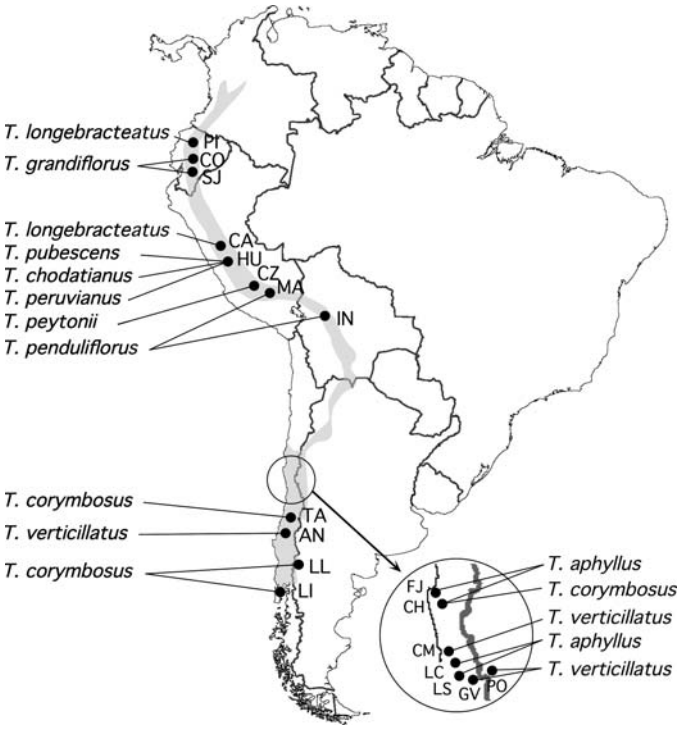

Fig. 1. Geographical distribution of *Tristerix* and locations of study populations. See Table 2 for key to abbreviations.

elevation and adjacent areas of the Andes of Argentina and south-central Chile (Fig. 1, Table 1). *Tristerix* is most diverse in Peru where four of its seven species are endemic. *Tristerix aphyllus* is found only in central Chile, and *T. secundus* is restricted to the Cordillera Occidental of Colombia. Only three species have wide distributions: *T. longebracteatus* in northern South America (from central Colombia to central Peru, Table 1) and *T. verticillatus* and *T. corymbosus* in southern South America. *Tristerix verticillatus* is found from southern Bolivia to the eastern slopes of the Andes in Argentina and central Chile. *Tristerix corymbosus* is found along the western slopes of the Andes in Chile and in Argentina northwest of Patagonia. All but three species of *Tristerix* are sympatric with at least one other species (Table 1).

Most *Tristerix* species have wide host ranges, except for *T. aphyllus*, that only parasitizes the cacti *Echinopsis* (ex *Trichocereus*) and *Eulychnia* (Mauseth et al., 1984; Kuijt, 1988). The other host-specific species is *T. chodatianus* of Peru, that occurs only on *Polylepis* (Rosaceae). Although the relationship is not obligate, *T. verticillatus* and *T. penduliflorus* are frequently found on *Schinus* (Anacardiaceae).

Tristerix can be distinguished from other South American Loranthaceae by the presence of simple, terminal, racemose inflorescences with large, brilliant red or red and yellow flowers. These are tetramerous or pentamerous and the stamens are isomorphic with versatile anthers. Among the five relictual South American genera, only *Tristerix* and *Ligaria* lack epicortical roots. Only *Tristerix* has undergone a radiation into multiple species; the other four genera are monospecific. *Tristerix* also differs from these four genera, which are restricted to temperate or high altitude biomes, in that it also occurs in tropical areas (Table 1). In his revision, which included descriptions of three new species, Kuijt (1988) divided the genus into two subgenera, *Tristerix* (*T. aphyllus* and *T. corymbosus*) and *Metastachys* (the remaining nine species). This classification was based mainly in the number of petals and the presence or absence of bracteoles. The objective of the present study is to test this subgeneric classification by reconstructing the phylogeny of the genus using molecular markers—the first phylogeny for any genus in Loranthaceae. Moreover, we will use the molecular phylogeny to address the distribution of various morphological characters and life history features, particularly with respect to how abiotic and biotic factors have influenced speciation in the genus.

MATERIALS AND METHODS

Taxon sampling and molecular methods—Ten of the 11 species of *Tristerix* were sampled for this study (Fig. 1, Table 2); only *T. secundus* of Colombia was not obtained. Individuals from different populations were used to test for monophyly in seven species. For two accessions of *T. grandiflorus*, the *atpB-rbcL* spacer was not obtained. For one accession of *T. aphyllus* and one of *T. penduliflorus*, ITS sequences are lacking. *Ligaria cuneifolia* (Ruiz & Pav.) Tiegh. and *Notanthera heterophylla* (Ruiz & Pav.) G. Don were also sampled and used as outgroups.

DNA was extracted from silica-dried leaf or flower tissue or in some cases herbarium samples, following a modified cetyltrimethylammonium bromide (CTAB) protocol for high-carbohydrate plants (Tel-Zur et al., 1999). One-tenth dilutions of the genomic DNA were used for PCR amplifications for the three gene partitions. Typical PCR amplification reactions included: 1× buffer (Promega, Madison, Wisconsin, USA; 10 mmol/L Tris HCl, 50 mmol/L KCl,

TABLE 1. Latitudinal and elevational distribution of *Tristerix*.

Tristerix species	Northern limit	Southern limit	Altitudinal range (m)	Sympatry[a]
T. secundus (Benth.) Kuijt	5°30′ N	2°50′ N	3000–3900	
T. longebracteatus (Desr.) Barlow & Wiens	4°30′ N	8°25′ S	2000–4900	A, B
T. grandiflorus (Ruiz & Pav.) Barlow & Wiens	0°10′ N	7°30′ S	2400–3600	A
T. pubescens Kuijt	7°45′ S	11°25′ S	3200–4200	B
T. peruvianus (Patschovsky) Kuijt	8°50′ S	10°20′ S	1800–3400	B
T. chodatianus (Patschovsky) Kuijt	8°35′ S	10°35′ S	3800–5000	B
T. peytonii Kuijt	13°10′ S	13°30′ S	1200–4300	
T. penduliflorus Kuijt	13°25′ S	21°30′ S	1200–4300	
T. verticillatus (Ruiz & Pav.) Barlow & Wiens	19°30′ S	38°15′ S	50–3000	C
T. aphyllus (Miers ex DC.) Barlow & Wiens	27°00′ S	34°20′ S	0–1500	C
T. corymbosus (L.) Kuijt	30°30′ S	42°40′ S	0–2400	C

[a]The same letter indicates sympatric species.

TABLE 2. Species and accessions sequenced in this study.

Taxa	Locality	Pop. Abb.	Voucher	Herbarium
Tristerix aphyllus	Near Fray Jorge Natn. Park, Region IV, Chile	FJ	*G. Amico 97*	BCRU [a]
Tristerix aphyllus	Chinchillas Natn. Park, Region IV, Chile	CH	*L. Suarez S/N*	BCRU [a]
Tristerix aphyllus	Los Andes, Region V, Chile	LS	*G. Amico 162*	BCRU [a]
Tristerix aphyllus	Near La Campana Natn. Park, Region V, Chile	LC	*G. Amico 166*	BCRU [a]
Tristerix corymbosus	Near Chinchillas Natn. Park, Region IV, Chile	CH	*G. Amico 80*	BCRU [a]
Tristerix corymbosus	Talca, Region VII, Chile	TA	*G. Amico 83*	BCRU [a]
Tristerix corymbosus	Llao Llao, Río Negro, Argentina	LL	*G. Amico 84*	BCRU [a]
Tristerix corymbosus	Near Linao, Chiloé, Region X, Chile	LI	*G. Amico 96*	BCRU [a]
Tristerix chodatianus	Huascaran Natn. Park, Ancash, Peru	HU	*D. N. Smith et al. 9536*	MO 3337838
Tristerix grandiflorus	Santo Domingo de los Colorados, Ecuador	SJ	*V. Zar 1368*	MO 3907304
Tristerix grandiflorus	Cotopaxi, Ecuador	CO	*W. Palacios et al. 2547*	MO 3672311
Tristerix longebracteatus	Quito, Pichinca, Ecuador	PI	*D. Fernández et al. 371*	MO 5889268
Tristerix longebracteatus	Chacas, Ancash, Peru	CA	*D. N. Smith 8288*	MO 722877
Tristerix penduliflorus	La Paz, Inquisivi, Bolivia	IN	*M. Lewis 35236*	MO 4661844
Tristerix penduliflorus	Urubamba, Cusco, Peru	MA	*P. Nuñez 8288*	MO 720879
Tristerix peruvianus	Road to Cochabamba, Huaraz, Peru	HU	*D. N. Smith & M. Buddensiek 10858*	MO 3307944
Tristerix peytonii	Urubamba, Cusco, Peru	CZ	*P. Nuñez & J. Arque 8287*	MO 3632650
Tristerix pubescens	Huascaran Natn. Park, Ancash, Peru	HU	*D. N. Smith & M. Buddensiek 11090*	MO 3303268
Tristerix pubescens	Huascaran Natn. Park, Ancash, Peru	HU2	*D. N. Smith 11388*	MO 3337809
Trisetrix verticillatus	La Calera, Region V, Chile	CM	*G. Amico 158*	BCRU [a]
Trisetrix verticillatus	Guardia Vieja, Region V, Chile	GV	*G. Amico 159*	BCRU [a]
Trisetrix verticillatus	Polvaredas, Mendoza, Argentina	PO	*G. Amico 156*	BCRU [a]
Trisetrix verticillatus	Near Antuco, Region VII, Chile	AN	*G. Amico 154*	BCRU [a]
Notanthera heterophylla	Los Queles Natn. Park, Region VIII, Chile		*G. Amico 151*	BCRU [a]
Ligaria cuneifolia	Km 51, Route 5 North, Santiago, Region V, Chile		*G. Amico 145*	BCRU [a]

[a]Voucher number to be assigned

pH 8.3), 1.5 mmol/L $MgCl_2$, 50 μmol/L dNTPs, 1 unit *Taq* polymerase, 0.4 μmol/L of each primer, and ca. 30 ng genomic DNA. For ITS (nuclear internal transcribed spacer and 5.8S ribosomal DNA) amplifications, 5% dimethylsulfoxide (DMSO, final concentration) was added. Ready-to-Go PCR Beads (Amersham Biosciences, Piscataway, New Jersey, USA) were utilized for some problematic PCR reactions.

The ITS region was amplified and sequenced using the primer pair 18S 1830 forward (5′-AAC AAG GTT TCC GTA GGT GA-3′) and 26S 40 reverse (5′-TCC TCC GCT TAT TGA TAT GC-3′). In addition, two regions from the chloroplast genome were amplified and sequenced: the spacer between the genes *atpB* and *rbcL* using the primer pair *atpB* 1 reverse (5′-GAA GTA GTA GGA TTG ATT CTC AT-3′) and *rbcL* 60 reverse (5′-CAG GAG TAT AAT AAG TCA TTG-3′) and the *trnL-F* region (including the *trnL* intron) using the two primers described in Taberlet et al. (1991).

The PCR thermal cycle profile for ITS was 5 min at 95°C, 35 cycles of 1 min at 94°C, 1 min at 52°C, and 1 min at 72°C, with a final extension of 10 min at 72°C. For the chloroplast regions, a touch down profile was used consisting of 5 min at 95°C, 5 cycles of 30 s at 94°C, 30 s at 52°C, and 1 min at 72°C, followed by 33 cycles of 30 s at 94°C, 30 s at 48°C, and 1 min at 72°C, with a final extension of 10 min at 72°C. In all reactions negative controls, lacking genomic DNA, were run to check for DNA contamination. Cycle sequencing reactions were performed directly on the purified PCR products following standard protocols using BigDye terminator Cycle Sequencing Ready Reaction Kit with AmpliTaq DNA Polymerase (Applied Biosystems, Foster City, California, USA) with Better Buffer (The Gel Co., San Francisco, California, USA). Sequences were determined with an ABI 377 automated sequencer (Applied Biosystems). All sequences generated in this study have been deposited with NCBI GenBank under the following accession numbers: DQ442916 to DQ442986.

Phylogenetic analyses—Because PCR amplifications were problematic for several DNA samples obtained from herbarium specimens, taxon sampling between the ITS and chloroplast data sets was not identical. Individual sequences were aligned manually using BioEdit (Hall, 1999). PAUP* (Swofford, 2002) was used to conduct maximum parsimony (MP) analyses; the branch-and-bound search option was used for all separate and combined partitions. Nodal support was assessed using the nonparametric bootstrap (BS) (Felsenstein 1985) with 1000 pseudoreplicates using a heuristic search with the tree-bisection-and-reconnection option for branch swapping. Indels in the ITS data set did not provide any phylogenetic information and were treated as missing data. In contrast, indels were informative for the chloroplast partitions and thus were manually coded as present or absent. Gaps were considered homologous only when they shared identical boundaries and length. Insertions generally consisted of tandem duplications and only those of the same length were used in gap coding. Moreover, only those gaps shared with the ingroup were coded for the outgroup. A total of 27 indels were coded for the *atpB-rbcL*, and 11 for the *trnL-F* partitions. All alignments used in this study can be found at http://www.parasiticplants.siu.edu/Alignments/Alignments.html.

Models of sequence evolution for each of the partitions and for all combined data sets were determined using MrModeltest (Nylander, 2004). The selected model was used to perform maximum likelihood (ML) and Bayesian inference (BI) analyses. For the nuclear partition, the HKY85+Γ model (Hasegawa, Kishino and Yano, 1985) was selected, whereas for the chloroplast partition the GTR+Γ (General Time Reversible model, Tavaré, 1986) was used. When all three partitions were combined the selected model was GTR+Γ. Maximum likelihood analysis was performed using PAUP*, and nodal support was obtained using the nonparametric bootstrap with 100 pseudoreplicates. Bayesian inference was performed using MrBayes (Huelsenbeck and Ronquist, 2001) wherein two independent analyses were run with four chains each, for 5×10^6 generations. Trees and parameters were saved every 100 generations, producing 50,000 trees. Starting model parameters were assigned uniform prior probabilities and estimated as part of the analysis, but in cases in which more than one partition was analyzed, the estimates were unlinked between data partitions, thus allowing each to vary independently. The burn-in was determined by stationary in the –ln likelihood score. The split frequency (variance between the two independent runs) in all cases was below 0.001, thus confirming that sampling was from the posterior probability distribution. In the case of the chloroplast partition in which gaps were coded, a mixed matrix was used as an input file in MrBayes. Here the nucleotide sequences were analyzed with the selected model, whereas the gaps were treated as restriction site data.

Eleven discrete morphological characters were scored for each species using data from Kuijt (1988) and from direct observation of living plants and herbarium specimens. Morphological character state transformations were optimized using MacClade (Maddison and Maddison, 2000) (see Appendix S1). Photographs of eight of the 11 species of *Tristerix* can be found on the Parasitic Plant Connection web site (Nickrent, 1997 onward).

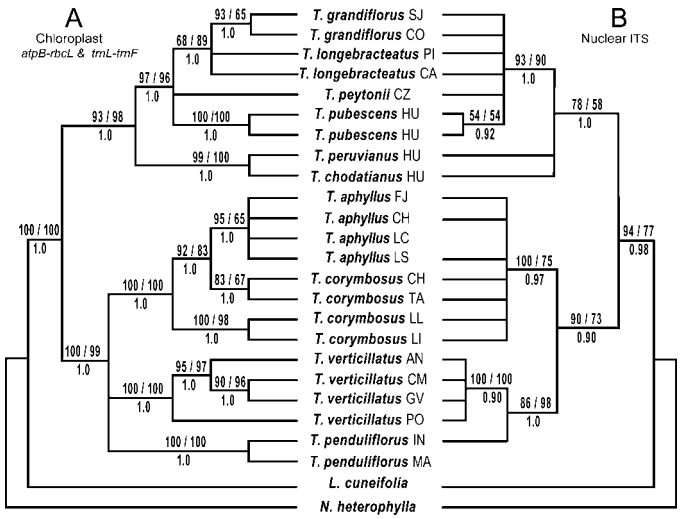

Fig. 2. Comparison of topologies obtained from maximum parsimony (MP), maximum likelihood (ML), and Bayesian inference (BI) analyses of chloroplast and nuclear data partitions. Numbers above lines are MP bootstrap values (1000 pseudoreplicates) and ML bootstrap values (100 pseudoreplicates). Numbers below the lines are BI posterior probabilities. (A) Strict consensus of 18 equally parsimonious trees ($L = 383$) obtained from an analysis of the chloroplast partition (*atpB-rbcL* intergenic spacer plus *trnL-F*). (B) Strict consensus of eight equally parsimonious trees ($L = 269$) obtained from an analysis of the nuclear (ITS) partition.

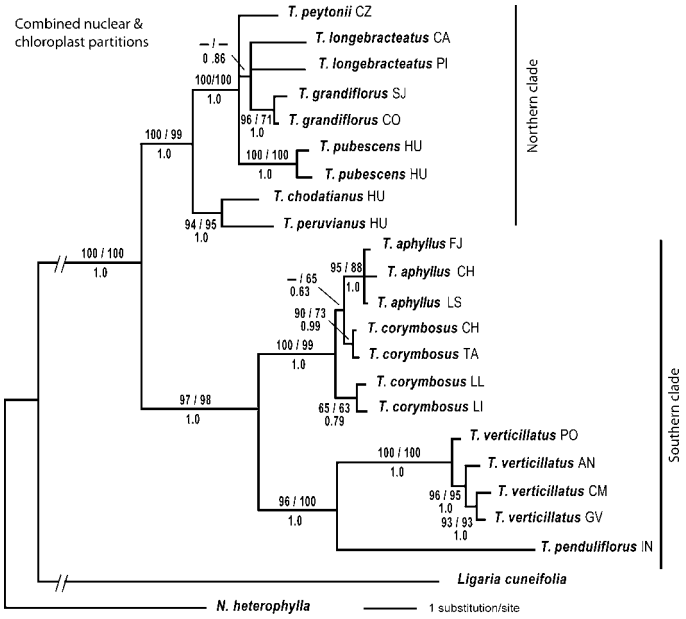

Fig. 3. Phylogram obtained from Bayesian inference (BI) of the combined chloroplast and nuclear partitions. Numbers above lines are maximum parsimony (MP) bootstrap values (1000 pseudoreplicates) and maximum likelihood (ML) bootstrap values (100 pseudoreplicates). Numbers below the lines are BI posterior probabilities.

RESULTS

The ITS partition had 695 aligned positions and contained essentially no ambiguous positions. Including the outgroup, this partition had 178 variable sites, of which 74 were parsimony informative, whereas 44 of the 122 variable sites were parsimony informative for the ingroup alone. Maximum parsimony analysis resulted in eight equally parsimonious trees ($L = 269$). Double peaks at several sites in the sequence electropherograms were found in different accessions of *Tristerix aphyllus* and *T. corymbosus*. A total of 16 polymorphic sites were found, and these were coded as ambiguous. Five of these sites were polymorphic in all individuals of *T. corymbosus* and *T. aphyllus*.

With the outgroup included, the *atpB-rbcL* intergenic spacer had 899 aligned positions with 155 variable sites, of which 70 were parsimony informative. Considering just the ingroup, the number of variable sites dropped to 93, of which 46 were parsimony informative. The *trnL-F* region had 720 aligned positions with 133 variable sites, of which 65 were parsimony informative. The ingroup had 83 variable sites for this region, of which 45 were parsimony informative.

All analytical methods (MP, ML, and BI) of both chloroplast regions (*atpB-rbcL*, *trnL-F*) resulted in trees with congruent topologies; thus they were combined into one chloroplast partition and analyzed together. Eighteen equally parsimonious trees ($L = 383$) were obtained from an analysis of this combined chloroplast partition. The nuclear ITS tree (with smaller taxon sampling) generally had a topology similar to that chloroplast tree (but was less resolved; see Fig. 2); thus these data were combined and a "total evidence tree" was generated (Fig. 3). In this analysis, three most parsimonious trees were found of 678 steps.

All partitions and analyses strongly supported an ingroup composed of two distinct clades. The first (northern) clade is composed of six species from Peru, Ecuador, and Colombia: *T. chodatianus*, *T. grandiflorus*, *T. longebracteatus*, *T. peruvianus*, *T. peytonii*, and *T. pubescens*. Within this northern clade, two Peruvian endemics (*T. chodatianus* and *T. peruvianus*) form a strongly supported clade that is sister to the remaining four species, but relationships among these four species are not strongly supported. Although the chloroplast genes gave moderate support for a clade composed of *T. grandiflorus* and *T. longebracteatus*, nuclear ITS failed to resolve this clade. Possibly BS support for this relationship would increase if an *atpB-rbcL* intergenic spacer sequence could be obtained from *T. grandiflorus*. The two disjunct populations of *T. longebracteatus* show affinity but do not form a clade with either the chloroplast or nuclear partitions. The second (southern) clade is composed of two strongly supported clades, each with two species: *T. aphyllus* plus *T. corymbosus* and *T. penduliflorus* plus *T. verticillatus*. With the exception of *T. penduliflorus* of southern Peru and Bolivia, all have distributions in southern South America (mainly Chile and Argentina). Here, the strongest phylogenetic signal for these relationships derive from the ITS partition, as the chloroplast genes fail to distinguish the latter clade (Fig. 2). Both the chloroplast and nuclear gene partitions support the monophyly of *T. verticillatus* (four populations). In *T. corymbosus*, the chloroplast partition shows that two populations with an extreme southern distribution (LI and LL) are sister to two northern populations, as well as a clade comprising all four populations of *T. aphyllus*. Strong support for the paraphyly of *T. corymbosus* is only seen with the chloroplast genes (Fig. 2) and in the combined analysis (Fig. 3). The nuclear partition does not resolve the relationship between *T. corymbosus* populations

and *T. aphyllus*; however, it does support a clade formed by both species.

DISCUSSION

Results of this molecular phylogenetic study of *Tristerix* provide, for the first time, compelling evidence that can be used to generate a new classification of the genus as well as data useful in addressing the evolution of morphological features and life history traits. As will be highlighted, this study also provides an example in which the phylogenetic structure of populations brings to the fore issues such as paraphyletic species and sympatric speciation.

Classification—Our results clearly differentiate two major clades within *Tristerix*, one composed of six species with northern distributions (Colombia, Peru, and Ecuador) and another with four species from more southern regions in South America (southern Peru and Bolivia, Chile, and Argentina). The differentiation of these two clades is well supported by both nuclear and chloroplast genes using all analytical methods. These clades do not conform to the previously proposed subgeneric classification by Kuijt (1988) but appear to correlate more with geographic distribution (Fig. 1, Table 1). Two features of the Kuijt (1988) classification appear valid, i.e., the recognition of a close relationship between *T. corymbosus* and *T. aphyllus* (subg. *Tristerix*) and the affinity of seven of the nine remaining subg. *Metastachys* species. Molecular phylogenetic analyses strongly support the transfer of two species, *T. verticillatus* and *T. penduliflorus*, from subg. *Metastachys* to subg. *Tristerix*. Given its morphology and geographical distribution, we can assume that *T. secundus* (not sampled in this study) is also a member of *Metastachys*.

Paraphyletic species—We do not advocate changing the current circumscriptions for any *Tristerix* species, although adherence to one of several competing species concepts might compell us to do so. Two cases of nonmonophyly for the chloroplast genome were seen: *T. longebracteatus* and *T. corymbosus*. For the former, the two accessions sampled were unresolved relative to the *T. grandiflorus* clade; however, this likely stems more from lack of data (missing *atpB-rbcL* spacer sequences) than from an actual genetic basis. The tree shown in Fig. 3 indicates that the three populations of *T. aphyllus* represent an "apospecies" and that the four populations of *T. corymbosus* could be considered a "metaspecies" (sensu Donahue, 1985; De Queiroz and Donoghue, 1988). But the data presented herein show that *T. corymbosus* is "positively paraphyletic." Specifically, the chloroplast gene tree strongly supports a topology in which *T. aphyllus* is more closely related to the TA and CH populations of *T. corymbosus* than to the other two populations of that species (LI and LL). Paraphyly is not shown by the ITS tree (Fig. 2); however, given that coalescence occurs four times faster in maternally inherited chloroplast genes than in biparentally inherited nuclear genes (Hudson, 1990), this result is not unexpected. Moreover, we outline next a scenario that describes how this speciation event may have occurred. For these reasons, we consider *T. corymbosus* a "plesiospecies" (following Olmstead, 1995), as opposed to splitting it into several smaller monophyletic units as required by the geneological species concept (Baum and Shaw, 1995). Our rationale for this is that *T. aphyllus* is a genetically and morphologically distinct, clearly defined taxon that derives from populations representing one portion of the distribution of a wider-ranging taxon, *T. corymbosus*. This type of speciation in plants likely occurs very commonly (Rieseberg and Brouillet, 1994).

The polymorphisms found in ITS between these two species might suggest a scenario for hybridization; however, some of the individuals that shared polymorphisms were widely separated geographically (Fig. 1). If the ITS ribosomal cistrons were distributed on separate chromosomes, these polymorphisms could have arisen independently via incomplete concerted evolution. Although *Tristerix aphyllus* and *T. corymbosus* are closely related, showing genetic differentiation only in the chloroplast genes, several morphological autapomorphies are found in the former species: the absence of leaves, red fused cotyledons, spherical white fruits, red inflorescences, extensive endophytic growth, and erect flowers. We feel these are compelling reasons to retain *T. aphyllus* as a species.

Morphological character evolution—Using the combined data, the topology of the most likely Bayesian tree was simplified by reducing most species to a single terminal; the exceptions were *T. corymbosus* and *T. verticillatus*, that were polymorphic for several features among populations. This simplified tree (Fig. 4) was then used to explore the evolution of 11 morphological characters as well as associated biomes and pollinators.

Tristerix species in the southern clade have uniformly red corollas, with the exception of *T. penduliflorus*, that has a red corolla with a yellow apical region. Although bicolored, this flower has a different pattern than the northern clade taxa that predominantly show the red-yellow-red banded pattern. The exception to this is *T. peruvianus*, that either retains the uniformly red flower or has lost the central yellow band. Thus, character 10 provides the only morphological feature that tracks the separation of the highly supported northern and southern clades of *Tristerix*.

Character 1 (haustorial endophyte) appears to be a synapomorphy for *Tristerix*. The two outgroup genera have localized infections, whereas members of the southern clade all spread within the host cortex, thus forming new shoots at regions distal to the original infection. Unfortunately, data on the endophyte behavior is lacking for the northern clade, except *T. longebracteatus*, that has the spreading cortical strands. The occurrence of this state in this one taxon results in a most parsimonious reconstruction wherein it is present in all members of the northern clade. Further observations are needed to confirm this hypothesis.

We have not identified any morphological features that support the clade composed of all southern taxa, despite the strong support this clade obtained from molecular data (Fig. 3). Within this clade, the close relationship between *Tristerix aphyllus* and *T. corymbosus* is supported by two morphological characters that distinguish them from the rest of the species: the presence of bracteoles subtending each flower (character 5) and four petals (character 8). Indeed it was these two features that lead Kuijt (1988) to segregate them in subgenus *Tristerix*. The inclusion of *T. verticillatus* and *T. penduliflorus* with the southern clade taxa is strongly supported. Given its inflorescence structure (flowers in whorls), pollinators, and distribution, *T. penduliflorus* would most certainly be placed with the northern clade taxa, but this conflicts with the molecular data

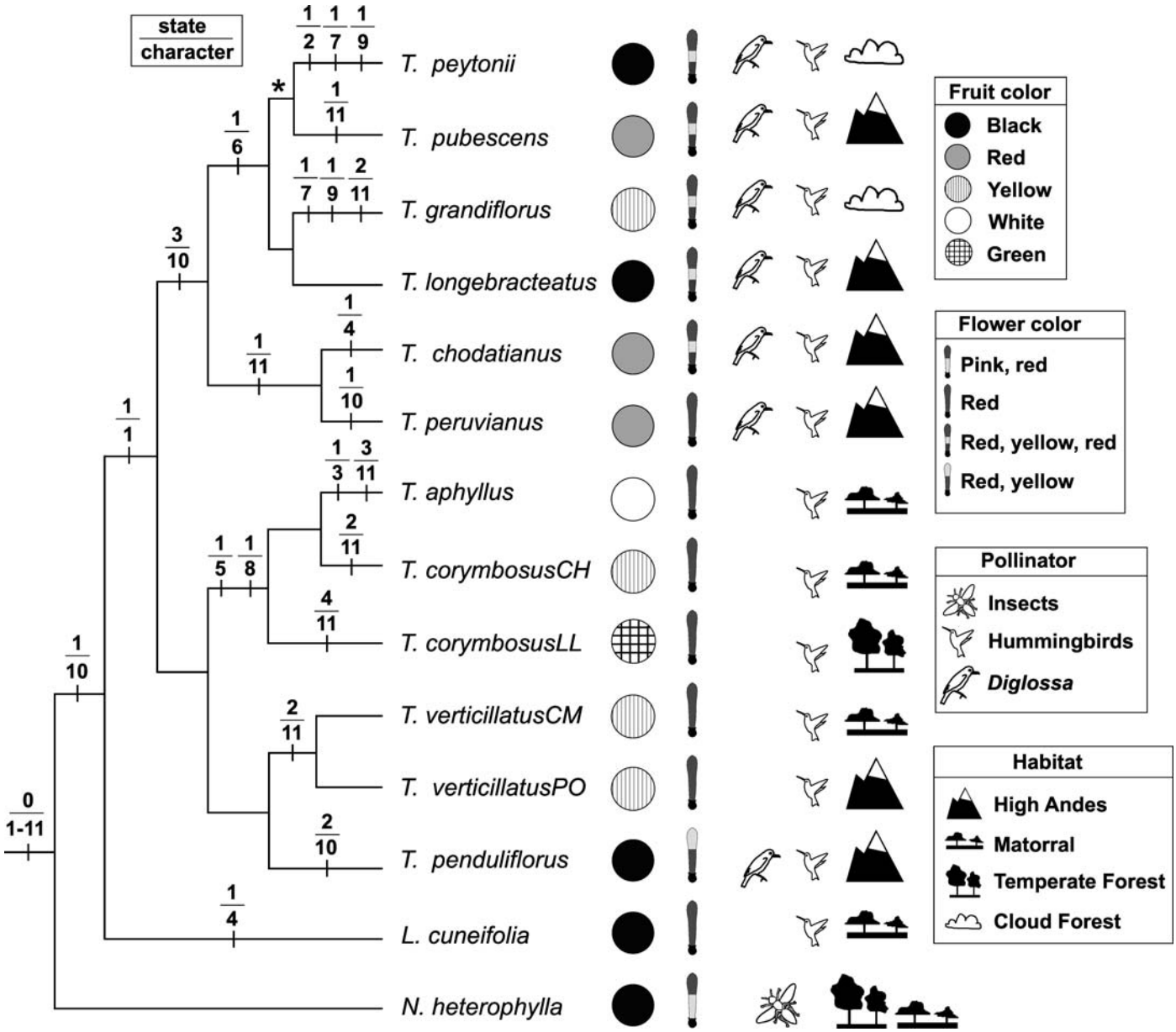

Fig. 4. Simplified topology derived from the most likely Bayesian inference (BI) tree obtained from analysis of the combined data set. Characters (denominators) and character states (numerators) for 11 morphological and two life history features are plotted on the branches. Symbols are used for morphological character 10 (flower color) and 11 (fruit color) as well as for pollinators and biomes. An assumption of the plesiomorphic condition for all characters is shown at the base of the tree. The asterisk indicates no support for the clade. Characters and character states are as follows: 1, endophytic system (0 localized infection, 1 spreading by cortical strands); 2, stem axis quadrangular (0 = no, 1 = yes); 3, leaf (0 = developed, 1 = reduced to scales); 4, leaf sclerotic tip (0 = absent, 1 = present); 5, bracteoles (0 = absent, 1 = present); 6, foliaceous bracts (0 = absent, 1 = present); 7, floral bud > 8 cm long (0 = no, 1 = yes); 8, petal number (0 = five or six, 1 = four); 9, flower curvature (0 = no, 1 = yes); 10, floral bud colors from base to apex (0 = pink, 1 = red, 2 = red, yellow, red, 3 = red, yellow); 11, fruit color (0 = black, 1 = red, 2 = yellow, 3 = white, 4 = green). *T., Tristerix; L., Ligaria; N., Notanthera.*

(nuclear and combined analyses) that strongly support its position as sister to *T. verticillatus* of the southern clade.

As mentioned, the northern clade is supported by the presence of red-yellow-red banded flowers. *Tristerix peruvianus* was described by Kuijt (1988) as having fenestrated flower buds, and he postulated that this is unique among *Tristerix* species. This feature, apparent during floral bud maturation, is recognized by the separation of the petals from one another approximately midway along the length of the corolla tube, thereby forming elongated vents. We found that *T. pubescens*, *T. longebracteatus*, and possibly *T. chodatianus* also have fenestrated floral buds. More field observations are necessary, but it is possible that this character is an additional synapomorphy for the northern clade.

Molecular data strongly support a clade composed of *Tristerix longebracteatus*, *T. grandiflorus*, *T. peytonii*, and *T. pubescens*, and this clade is marked by one synapomorphy, a foliaceous bract below the flower (character 6). These four

closely related species are distinguished mainly by fruit color and the size and shape of the flower. In the combined data tree, no support was obtained for within-clade relationships (Fig. 3), thus the homologous condition for the two characters states shared by *T. grandiflorus* and *T. peytonii* (character 7, floral bud >8 cm and character 9, flower curved) cannot be determined. If one looks at the three possible alternative resolutions of the polytomy, then two favor parallelism and the other is uncertain, i.e., it is equally parsimonious to invoke parallelism or homology. On the other hand, when optimized for the most likely tree topology from the combined analysis, parallel evolution for these characters is suggested (Fig. 4). The four species in this clade show continuous interspecific variation in pubescence and intraspecific polymorphism in leaf shape, thus highlighting their close relationship (see Kuijt, 1988, p. 35). Taken together, these data suggest that this species complex has diverged only relatively recently, in agreement with geological data that indicate that high Andean habitats have been available for colonization only since the end of the Tertiary (Simpson, 1975). This also parallels other neotropical taxa such as *Inga,* in which diversification has been recent and is associated with Andean orogeny (Richardson et al., 2001).

Well supported by molecular data is the sister relationship between the *T. chodatianus* and *T. peruvianus* clade and the remaining members of the northern clade. These two species both have red fruits and may share an additional synapomorphy: a prominent calyculus that spreads when dried. Kuijt (1988) states that *T. peruvianus* is similar to *T. secundus* (not sampled in this study) but differs by having smaller, thinner, and more glaucous leaves. *Tristerix chodatianus* shares with these two species the characteristic of flowers occurring in whorls of three or four, but as *T. peytonii* and *T. penduliflorus* also share this feature, it does not appear to be diagnostic for this clade.

Tristerix chodatianus has a distinctive leaf that bears a sclerotic tip (character 4). Strangely, a similar leaf tip is seen in *Ligaria cuneifolia* (used here as an outgroup), but not in any other taxa. *Ligaria* is polymorphic for this feature; in some individuals it is prominent, whereas in others it is inconspicuous. If the character is homologous, then at least three losses are required to explain its distribution on the phylogenetic tree (Fig. 4); thus parallelism is a more parsimonious scenario for this character.

Pollination syndromes and speciation in Tristerix—Among the South American extant relictual mistletoe genera, only *Tristerix* and *Ligaria*, with their large tubular red flowers, are bird pollinated (Kuijt, 1988; Rivera et al., 1996; Medel, 2002; Aizen, 2003). The other genera (*Notanthera*, *Desmaria*, and *Gaiadendron*) have small, light-colored (pink, orange, and yellow) flowers that are pollinated mainly by insects (Kuijt, 1963, 1985; G. C. Amico, unpublished data). Although all these genera have similar geographic distributions, *Tristerix* and *Ligaria* flower during winter, whereas the other genera flower in summer. The evolution of cold-season flowering may be related to the ability of homothermous birds to function as pollinators during both winter and summer, as opposed to poikilothermous insects that can only function during the summer.

Hummingbirds are most diverse in the Andes, and several species occur along the northern range of *Tristerix* at elevations as high as 5000 m a.s.l. (Fjeldsa and Krabbe, 1990; Altshuler et al., 2004). To date there is no published information on hummingbird pollination of *Tristerix* from the high Andes. We observed this in the southern part of their distribution, where the monochromatic red flowers of *Tristerix* species are pollinated solely by hummingbirds (mainly two species: *Sephanoides sephaniodes* and *Patagonas gigas*). In the northern part of their range, *Tristerix* species are pollinated by both humingbirds and flower-piercers. At two localities in Peru (Huascarán National Park and Cuzco), we observed *Colibri coruscans* pollinating *T. pubescens* and *T. penduliflorus* (the latter species was also visited by *Lesbia nuna*). These mistletoes were also visited by the flower-piercer *Diglossa brunneiventris*, a species documented as the pollinator of *T. longebracteatus* in northern Peru (Graves, 1982). The genus *Diglossa*, with 16 primarily high-elevation Andean species, has a distribution that coincides with that of *Tristerix* (Fjeldsa and Krabbe, 1990). These birds are generally considered nectar robbers, but they also function as authentic pollinators of several plants, including *Tristerix* (Graves, 1982; Maloof and Inouye, 2000). Eight of the 11 species of *Tristerix* overlap with the distribution of *Diglossa* spp., and all these species have red-yellow-red bicolored flowers (Fig. 4). As discussed, some of the northern clade *Tristerix* have fenestrated flowers, and all but *T. peruvianus* also have the bicolored corollas. We suggest that these function as floral guides and are recognized by *Diglossa* spp. that open the flower at the fenestration, thereby affecting pollination. Although pollinated by *Diglossa*, the floral banding pattern in *T. penduliflorus* is different (red-yellow), and this species does not show fenestrae, thus suggesting an independent evolution of the yellow floral guide.

Two species of *Tristerix* have colonized cloud forests: *Tristerix peytonii* of southern Peru and *T. grandiflorus* in northern Peru and Ecuador (Fig. 4, Table 1). It is noteworthy that these species have the longest corolla tubes among all species in the genus. For *T. grandiflorus*, flowers may be up to 16 cm long, thus suggesting directional selection being driven by the pollinating bird. Kuijt (1988) hypothesized that the distinctive flowers of *T. grandiflorus* are associated with the cloud forest hummingbird *Ensifera ensifera*, and this correlates well with its beak length (10 cm).

Seed dispersal in Tristerix—Relatively few studies have been carried out on seed dispersal in *Tristerix*, but both mammals (*Dromiciops*, discussed later) and birds are involved (Parker, 1980; Amico and Aizen, 2000; Medel et al., 2004). The Gondwanan families Contingidae and Tyrannidae represent the oldest bird lineages in South America and were present there prior to 40 million years before present (mybp; Ericson et al., 2003; Barker et al., 2004). *Tristerix chodatianus* and *T. peruvianus* of central Peru are dispersed by the cotinga, *Zartornis stresemanni* (Parker, 1980), whereas *T. aphyllus*, *T. corymbosus*, and *T. verticillatus* of Chile are dispersed primarily by the mockingbird *Mimus thenca* (Mimidae) and secondarily by the flycatcher *Elaenia albicepts* and a thrush *Turdus falcklandii*. There is no information on the seed dispersal of the other six *Tristerix* species, but based on their distributions, the bird families Contingidae, Tyrannidae, and Turdidae are the most likely candidates. Turdidae and Mimidae have a Laurasian origin and appeared on the South American continent much later (2–5 mybp) than Contingidae and Tyrannidae (Ericson et al., 2003 and references therein). We therefore suggest that the early ancestors of *Tristerix* were

dispersed by Cotingidae, Tyrannidae, and *Dromiciops* and more recently by Turdidae and Mimidae.

In the temperate forests of Chile and Argentina, seeds of *T. corymbosus* are dispersed by *Dromiciops gliroides*, an old marsupial lineage with a Gondwanan origin (Amico and Aizen, 2000), which feeds on the ripe green fruits. Fruits are yellow in the matorral populations of *T. corymbosus*, and seeds are dispersed by birds (Hoffmann et al., 1986; G. C. Amico, unpublished data). Seeds from the sympatric species *T. aphyllus* with white fruits are dispersed by the same bird (Medel et al., 2002). The topology of the molecular tree (Fig. 3) indicates that the temperate forest populations (LL and LI) diverged first and that the matorral populations (CH and TA) are more derived. Optimization of fruit color on the molecular tree does not help to identify an ancestral state because reconstruction is equivocal; however, we hypothesize that the green color found in the forest populations results from heterochrony in fruit development and not to selection pressure from the different dispersers (G. C. Amico, unpublished manuscript).

Did Tristerix aphyllus arise via sympatric speciation?—It has been proposed that host races of phytophagous insects represent an intermediate stage between polymorphic populations and reproductively isolated species (Berlocher and Feder, 2002; Drés and Mallet, 2002). According to Drés and Mallet (2002, p. 471), "Host races are genetically differentiated, sympatric populations of parasites that use different hosts, and between which there is appreciable gene flow." Host races have been described numerous times for mistletoes based on seed inoculation experiments (Clay et al., 1985), allozyme studies (Glazner et al., 1988; Nickrent and Stell, 1990), and AFLPs (Jerome and Ford, 2002); however, despite implications that this process leads to speciation (Norton and Carpenter, 1998), robust documentation is lacking. Although objections to sympatric speciation have been voiced (Futuyma and Mayer, 1980; Felsenstein, 1981), theoretical studies show that this process is plausible under real biological conditions such as when host-specific deleterious and beneficial mutations exist (Kawecki, 1996, 1997) and when genes control assortative mating (Johnson et al., 1996; Dieckmann and Doebeli, 1999). In addition, pleiotropy between host choice and assortative mating is a likely route toward the evolution of linkage disequilibrium that leads to distinct genetic entities (Drés and Mallet, 2002).

The morphological and genetic differences provide strong evidence that *T. aphyllus* is a species distinct from *T. corymbosus*. Among Loranthaceae, *Tristerix aphyllus* is unique because it exists as an endophyte within the cactus cortex and its only emergent parts are inflorescences (Mauseth et al., 1984, 1985). This extreme reduction in vegetative morphology and dependence upon the host for most carbon (Kraus et al., 1995) parallels other mistletoes that approach holoparasitism, such as *Arceuthobium* (Viscaceae). Given the topology of the molecular tree (Fig. 3), reciprocal monophyly for the two species is not met. Aside from the classification issues this topology presents (Kizirian and Donnelly, 2004), it also shows that *T. aphyllus* is derived from matorral populations (CH and TA) of *T. corymbosus*. The Chilean matorral formed during the Pliocene-Pleistocene (Hinojosa and Villagran, 1997), i.e., relatively recently compared with the high-elevation Andean forests that began in the Miocene (Taylor, 1991). We propose that the emergence of this new biome brought the ancestral *Tristerix* into contact with new host niches, specifically the cactus genera *Echinopsis* and *Eulychnia*. The model of sympatric speciation developed by Dieckmann and Doebeli (1999) performs best in recently colonized habitats where no competition exists with other sympatric species, as is the case with the Chilean matorral. With phytophagous insects, mating on the host is the most straightforward path by which host shifts can reduce gene flow (Bush, 1969). In *Tristerix* mistletoes, such host fidelity is attained via the behavior of the seed-dispersing bird (*Mimus thenca*) that visits both species and prefers high perches (Martínez del Rio et al., 1995; Medel et al., 2002, 2004). This behavior results in more seeds being deposited on cactus hosts (the highest vegetation in the area) than on other hosts. We suggest that, over time, pleiotropy between host choice and assortative mating genes lead to linkage disequilibrium and genetic isolation of the two mistletoe species. At present, peak flowering times overlap only slightly between *T. aphyllus* and *T. corymbosus*, thus limiting interspecific pollen transfer. The two species appear reproductively isolated and artificial inoculations of *T. corymbosus* seeds onto cactus hosts are not successful (W. Gonzalez, personal communication). Peak fruiting periods are also different, thus reinforcing host specialization. Although we cannot completely discount an allopatric origin of *Tristerix aphyllus*, we feel these initial data are compelling and set the stage for further work.

Conclusions—To reconstruct the complex historical patterns and relationships among organisms, information from both ecology and phylogenetics is mutually informative. *Tristerix* provides an example of a genus that expanded both north and south while diversifying in response to ecological and geographical isolation coinciding with Andean orography. Although we have not established an absolute time scale for these divergences (no fossil record of *Tristerix* exists), many appear to be recent events as gauged by low levels of molecular divergence between various species pairs. Overall, we have shown that *Tristerix* is composed of northern and a southern clades. The molecular data strongly support the transfer of *Tristerix verticillatus* and *T. penduliflorus* from subgenus *Metastachys* to subg. *Tristerix*. This is despite the presence in the latter species of floral and fruit characteristics that would suggest an alliance with the northern clade. Selectional forces acting upon morphological features of the flowers and fruits stem mainly from pollinating and fruit-dispersing birds, and these forces changed as new biomes (such as matorral, cloud forest, etc.) became available since the Tertiary. Autochthonous genera, represented in our study by the outgroup *Notanthera*, have small, insect-pollinated flowers. This ancestral syndrome evolved into that found in bird-pollinated mistletoes such as *Ligaria* and *Tristerix* with large, tubular red flowers that are presently pollinated by hummingbirds. Members of the northern clade of *Tristerix* that inhabit high Andean or cloud forest biomes are also pollinated by *Diglossa*, that appears to forage based on corolla red-yellow banding and possibly fenestration. With the appearance of the dry matorral association in Chile, temperate-forest populations of *T. corymbosus* adapted to hosts in this new environment whose climate favored the development of yellow fruits at maturity. Some populations of this plesiospecies gave rise to mistletoes that could parasitize the cactus genera *Echinopsis* and *Eulychnia*. Subsequently, these populations became reproductively isolated from *T. corymbosus*, an isolation driven by

behavior of the main seed-dispersing bird, *Mimus thenca*. This new apospecies, *T. aphyllus*, is one of the most remarkable species in Loranthaceae, given its reduced vegetative morphology and physiology that approaches holoparasitism.

LITERATURE CITED

AIZEN, M. A. 2003. Influences of animal pollination and seed dispersal on winter flowering in a temperate mistletoe. *Ecology* 84: 2613–2627.

ALTSHULER, D. L., R. DUDLEY, AND J. A. MCGUIRE. 2004. Resolution of a paradox: hummingbird flight at high elevation does not come without a cost. *Proceedings of the National Academy of Sciences, USA* 101: 17731–17736.

AMICO, G. C., AND M. A. AIZEN. 2000. Mistletoe seed dispersal by a marsupial. *Nature* 408: 929–930.

AUKEMA, J. E. 2003. Vectors, viscin, and Viscaceae: mistletoes as parasites, mutualists, and resources. *Frontiers in Ecology and the Environment* 1: 212–219.

BARKER, F. K., A. CIBOIS, P. SCHIKLER, J. FEINSTEIN, AND J. CRACRAFT. 2004. Phylogeny and diversification of the largest avian radiation. *Proceedings of the National Academy of Sciences, USA* 101: 11040–11045.

BARLOW, B. A. 1983. Biogeography of Loranthaceae and Viscaceae. *In* D. M. Calder and P. Bernhardt [eds.], The biology of mistletoes, 19–45. Academic Press, New York, New York, USA.

BAUM, D. A., AND K. L. SHAW. 1995. Geneological perspectives on the species problem. *In* P. C. Hoch and G. D. Stephenson [eds.], Experimental and molecular approaches to plant biosystematics, 289–303. Missouri Botanical Garden, St. Louis, Missouri, USA.

BERLOCHER, S. H., AND J. L. FEDER. 2002. Sympatric speciation in phytophagous insects: moving beyond controversy. *Annual Review of Entomology* 47: 773–815.

BUSH, G. L. 1969. Sympatric host race formation and speciation in frugivorous flies of the genus *Rhagoletis* (Diptera, Tephritidae). *Evolution* 23: 237–251.

CLAY, K., D. DEMENT, AND M. REJMANEK. 1985. Experimental evidence for host races in mistletoe (*Phoradendron tomentosum*). *American Journal of Botany* 72: 1225–1231.

DE QUEIROZ, K., AND M. J. DONAHUE. 1988. Phylogenetic systematics and the species problem. *Cladistics* 4: 317–338.

DIECKMANN, U., AND M. DOEBELI. 1999. On the origin of species by sympatric speciation. *Nature* 400: 354–357.

DONAHUE, M. J. 1985. A critique of the biological species concept and recommendations for a phylogenetic alternative. *Bryologist* 88: 172–181.

DRÉS, M., AND J. MALLET. 2002. Host races in plant-feeding insects and their importance in sympatric speciation. *Philosophical Transactions of the Royal Society of London* 357: 471–492.

ERICSON, P. G. P., M. IRESTEDT, AND U. S. JOHANSSON. 2003. Evolution, biogeography, and patterns of diversification in passerine birds. *Journal of Avian Biology* 34: 3–15.

FELSENSTEIN, J. 1981. Scepticism towards Santa Rosalia, or why are there so few kinds of animals. *Evolution* 35: 124–138.

FELSENSTEIN, J. 1985. Confidence limits on phylogenies: an approach using the bootstrap. *Evolution* 39: 783–791.

FJELDSA, J., AND N. KRABBE. 1990. Birds of the high Andes. Apollo Books, Svendborg, Denmark.

FRY, J. 2003. Multilocus models of sympatric speciation: Bush versus Rice versus Felsenstein. *Evolution* 57: 1735–1746.

FUTUYMA, D., AND G. MAYER. 1980. Non-allopatric speciation in animals. *Systematic Zoology* 29: 254–271.

GLAZNER, J. T., B. DEVILIN, AND N. C. ELLSTRAND. 1988. Biochemical and morphological evidence for host race evolution in desert mistletoe, *Phoradendron californicum* (Viscaceae). *Plant Systematics and Evolution* 161: 13–21.

GRAVES, G. R. 1982. Pollination of a *Tristerix* mistletoe (Loranthaceae) by *Diglossa* (Aves, Thraupidae). *Biotropica* 14: 316–317.

HALL, T. 1999. BioEdit: a user-friendly biological sequence alignment editor and analysis program for Windows 95/98/NT. *Nucleic Acids Symposium Series* 41: 95–98.

HASEGAWA, M., H. KISHINO, AND T. YANO. 1985. Dating of the human-ape splitting by a molecular clock of mitochondrial DNA. *Journal of Molecular Evolution* 22: 160–174.

HINOJOSA, L. F., AND C. VILLAGRAN. 1997. Historia de los bosques del sur de Sudamérica, I: antecedentes paleobotánicos, geológicos y climáticos del Terciario del cono sur de América. *Revista Chilena de Historia Natural* 70: 225–239.

HOFFMANN, A. J., E. R. FUENTES, I. CORTES, F. LIBERONA, AND V. COSTA. 1986. *Tristerix tetrandrus* (Loranthaceae) and its host-plants in the Chilean matorral: patterns and mechanisms. *Oecologia* 69: 202–206.

HUDSON, R. R. 1990. Gene geneologies and the coalescent process. *Oxford Surveys in Evolutionary Biology* 7: 1–44.

HUELSENBECK, J., AND F. RONQUIST. 2001. MrBayes: Bayesian inference of phylogeny, version 3.1.2. *Bioinformatics* 17: 754–755.

JEROME, C. A., AND B. A. FORD. 2002. The discovery of three genetic races of the dwarf mistletoe *Arceuthobium americanum* (Viscaceae) provides insight into the evolution of parasitic angiosperms. *Molecular Ecology* 11: 387–405.

JIGGINS, C. D. 2006. Sympatric speciation: why the controversy? *Current Biology* 16: 333–334.

JOHNSON, P. A., F. C. HOPPENSTEADT, J. J. SMITH, AND G. L. BUSH. 1996. Conditions for sympatric speciation: a diploid model incorporating habitat fidelity and non-habitat assortative mating. *Evolutionary Ecology* 10: 187–205.

KAWECKI, T. J. 1996. Sympatric speciation driven by beneficial mutations. *Proceedings of the Royal Society London, B, Biological Sciences* 263: 1515–1520.

KAWECKI, T. J. 1997. Sympatric speciation via habitat specialization driven by deleterious mutations. *Evolution* 51: 1751–1763.

KIRKPATRICK, M., AND V. RAVIGNÉ. 2002. Speciation by natural and sexual selection: models and experiments. *American Naturalist* 159: S22–S35.

KIZIRIAN, D., AND M. DONNELLY. 2004. The criterion of reciprocal monophyly and classification of nested diversity at the species level. *Molecular Phylogenetics and Evolution* 32: 1072–1076.

KRAUS, R., P. TRIMBORN, AND H. ZIEGLER. 1995. *Tristerix aphyllus*, a holoparasitic Loranthaceae. *Naturwissenschaften* 82: 150–151.

KUIJT, J. 1963. On the ecology and parasitism of the Costa Rican tree mistletoe, *Gaiadendron punctatum* (Ruiz and Pavón) G. Don. *Canadian Journal of Botany* 41: 927–938.

KUIJT, J. 1969. The biology of parasitic flowering plants. University of California Press, Berkeley, California, USA.

KUIJT, J. 1985. Morphology, biology and systematic relationships of *Desmaria* (Loranthaceae). *Plant Systematics and Evolution* 151: 121–130.

KUIJT, J. 1988. Revision of *Tristerix* (Loranthaceae). Systematic Botany Monograph No. 19, American Society of Plant Taxonomists.

MADDISON, D. R., AND W. P. MADDISON. 2000. MacClade: analysis of phylogeny and character evolution, version 4.0. Sinauer, Sunderland, Massachusetts, USA.

MALOOF, J. E., AND D. W. INOUYE. 2000. Are nectar robbers cheaters or mutualists? *Ecology* 81: 2651–2661.

MARTÍNEZ DEL RIO, C. M., M. HOURDEQUIN, A. SILVA, AND R. MEDEL. 1995. The influence of cactus size and previous infection on bird deposition of mistletoe seeds. *Australian Journal of Ecology* 20: 571–576.

MAUSETH, J. D., G. MONTENEGRO, AND A. M. WALCKOWIAK. 1984. Studies on the holoparasite *Tristerix aphyllus* (Loranthaceae) infecting *Trichocereus chilensis* (Cactaceae). *Canadian Journal of Botany* 62: 847–857.

MAUSETH, J. D., G. MONTENEGRO, AND A. M. WALCKOWIAK. 1985. Host infection and flower formation by the parasite *Tristerix aphyllus* (Loranthaceae). *Canadian Journal of Botany* 63: 567–581.

MEDEL, R., C. BOTTO-MAHAN, C. SMITH-RAMIREZ, M. A. MENDEZ, C. G. OSSA, L. N. CAPUTO, AND W. L. GONZALES. 2002. Historia natural cuantitativa de una relación parasito-hospedero: el sistema *Tristerix*-cactaceas en Chile semiarido. *Revista Chilena de Historia Natural* 75: 127–140.

MEDEL, R., E. VERGARA, A. SILVA, AND M. KALIN-ARROYO. 2004. Effects of

vector behavior and host resistance on mistletoe aggregation. *Ecology* 85: 120–126.

NICKRENT, D. L. 1997 onward. The parasitic plant connection. Southern Illinois University. http://www.parasiticplants.siu.edu/ [February 2005].

NICKRENT, D. L, AND A. L. STELL. 1990. Electrophoretic evidence for genetic differentiation in two host races of hemlock dwarf mistletoe (*Arceuthobium tsugense*). *Biochemical Systematics and Ecology* 18: 267–280.

NORTON, D. A., AND M. A. CARPENTER. 1998. Mistletoes as parasites: host specificity and speciation. *Trends in Ecology and Evolution* 13: 101–105.

NYLANDER, J. A. 2004. MrModelTest, version 3.1.2. Distributed by the author. Evolutionary Biology Centre, Uppsala University, Uppsala, Sweden.

OLMSTEAD, R. 1995. Species concepts and plesiomophic species. *Systematic Botany* 20: 623–630.

PARKER, T. A. 1980. Distribution and biology of the White-cheeked Cotinga *Zaratornis stresemanni*, a high Andean frugivore. *Bulletin of the British Ornithologists' Club* 101: 156–265.

PENNINGS, S. C., AND R. M. CALLAWAY. 2002. Parasitic plants: parallels and contrasts with herbivores. *Oecologia* 131: 479–489.

REID, N. 1991. Coevolution of mistletoes and frugivorous birds? *Australian Journal of Ecology* 16: 457–469.

RESTREPO, C., S. SARGENT, D. J. LEVEY, AND D. M. WATSON. 2002. The role of vertebrates in the diversification of New World mistletoes. *In* D. J. Levey, W. R. Silva, and M. Galetti [eds.], Seed dispersal and frugivory: ecology, evolution and conservation, 83–98. CAB International, Wallingford, UK.

RICHARDSON, J. E., R. T. PENNIGTON, T. D. PENNIGTON, AND D. P. M. HOLLINGSWORTH. 2001. Rapid diversification of a species-rich genus of neotropical rain forest trees. *Science* 293: 2242–2245.

RIESEBERG, L. H., AND L. BROUILLET. 1994. Are many plant species paraphyletic? *Taxon* 43: 21–32.

.

RIESEBERG, L. H., AND J. F. WENDEL. 2004. Plant speciation—rise of the poor cousins. *New Phytologist* 161: 1–21.

RIESEBERG, L. H., T. E. WOOD, AND E. J. BAACK. 2006. The nature of plant species. *Nature (London)* 440: 524–527.

RIVERA, G. L., L. GALETTO, AND L. BERNARDELLO. 1996. Nectar secretion pattern, removal effects, and breeding system of *Ligaria cuneifolia* (Loranthaceae). *Canadian Journal of Botany* 74: 1996–2001.

SAVOLAINEN, V., M.-C. ANSTETT, C. LEXER, I. HUTTON, J. J. CLARKSON, M. V. NORUP, M. P. POWELL, D. SPRINGATE, N. SALAMIN, AND W. J. BAKER. 2006. Sympatric speciation in palms on an oceanic island. *Nature* 441: 210–213.

SCHLUTER, D. 2005. Ecology and the origin of species. *Trends in Ecology and Evolution* 16: 372–380.

SIMPSON, B. B. 1975. Pleistocene changes in the flora of the high tropical Andes. *Paleobiology* 1: 273–294.

SWOFFORD, D. L. 2002. PAUP*: phylogenetic analysis using parsimony (* and other methods), version 4.0b10. Sinauer, Sunderland, Massachusetts, USA.

TABERLET, P., L. GIELLY, G. PAUTOU, AND J. BOUVET. 1991. Universal primers for amplification of three noncoding regions of chloroplast DNA. *Plant Molecular Biology* 17: 1105–1109.

TAVARÉ, S. 1986. Some probabilistic and statistical problems on the analysis of DNA sequences. *Lectures on Mathematics in the Life Sciences* 17: 57–86.

TAYLOR, D. W. 1991. Paleobiogeographic relationships of Andean angiosperms of Cretaceous to Pliocene age. *Palaeogeography Palaeoclimatology Palaeoecology* 88: 69–84.

TEL-ZUR, N., S. ABBO, D. MYSLABODSKI, AND Y. MIZRAHI. 1999. Modified CTAB procedure for DNA isolation from epiphytic cacti of the genera *Hylocereus* and *Selenicereus* (Cactaceae). *Plant Molecular Biology Reporter* 17: 249–254.

WATSON, D. M. 2001. Mistletoe—a keystone resource in forests and woodlands worldwide. *Annual Review of Ecology and Systematics* 32: 219–249.